Sprinter

Ergänzung zur Betriebsanleitung | Supplement to the Operating Instructions | Document annexe à la notice d'utilisation | Instrucciones de servicio suplementarias | Integrazione delle Istruzioni d'uso | Aditamento ao Manual do Condutor | Complemento do manual de operação | Aanvulling op de handleiding | Tillæg til instruktionsbogen | Tillägg till instruktionsbok | Täydennys käyttöohjekirjaan | Tillegg til instruksjonsboken | Συμπλήρωμα για τις Οδηγίες Χρήσης | İşletme talimatına eklemeler | Completare la instrucțiunile de exploatare | Kiegészítés a kezelési útmutatóhoz | Doplněk k návodu k obsluze | Uzupełnienie do instrukcji obsługi | Dopuna uputstva za rukovanje | Kasutusjuhendi täiendus | Lietošanas instrukcijas papildinājums | Naudojimo intrukcijos papildymas | Dopuna uputa za rad | Dodatek k navodilom za uporabo | Dodatok k návodu na obsluhu | 사용 설명서 부록 | Bổ sung Hướng dẫn sử dụng | Lampiran tambahan pada panduan pengoperasian | คู่มือการใช้งานเพิ่มเติม | Допълнение към ръководството за експлоатация | Доповнення до посібника з експлуатації | Дополнение к руководству по эксплуатации | השלמה לספר הרכב |
تكملة لدليل التشغيل

9075846807

Bestellnummer T907 0282 76 Teilenummer 907 584 68 07 Ausgabe 2020-03

Mercedes-Benz

Redaktionsschluss 21.01.20

Deutsch 2
English (UK) 2
English (US) 2
Français 3
Español 3
Italiano 4
Português (Portugal) 4
Português (Brasil) 5
Nederlands 5
Dansk 6
Svenska 6
Suomi 7
Norsk 7
Ελληνικά 8
Türkçe 8
Română 9
Magyar 9
Čeština 10
Polski 10
Srpski 11
Eesti 11
Latviešu 12
Lietuvių k. 12
Hrvatski 13
Slovenščina 13
Slovenčina 14
한국어 14
Tiếng Việt 15
Bahasa Indonesia 15
ภาษาไทย 16
Български 17
Українська 17
Русский 17
עברית 19
العربية 19

Deutsch

Information zur Betriebsanleitung

Diese Ergänzung ist Bestandteil der gedruckten und der digitalen Betriebsanleitung Sprinter.

Sie ersetzt dort im Kapitel „Fahren und Parken“ - „Automatikgetriebe“ den Abschnitt „Parkstellung P einlegen“.

Bewahren Sie diese Ergänzung zusammen mit der Betriebsanleitung im Fahrzeug auf.

Parkstellung P einlegen

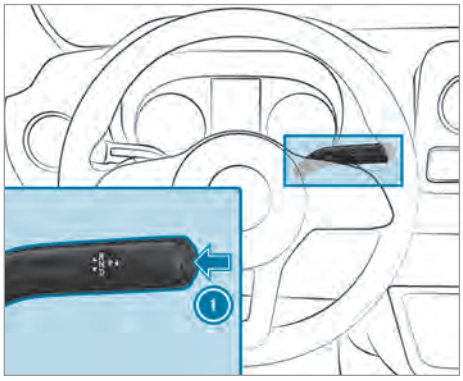

▶ Die Taste ① drücken.
Im Multifunktionsdisplay zeigt die Getriebestellungsanzeige auf P.

Wenn eine der folgenden Bedingungen erfüllt ist, wird die Parkstellung P automatisch eingelegt:

- Sie stellen den Motor in der Getriebestellung D oder R ab.
- Sie öffnen im Stillstand oder bei sehr geringer Fahrgeschwindigkeit in der Getriebestellung D oder R die Fahrertür.

English (UK)

Information on the Operating Instructions

This Supplement is part of the printed and Digital Sprinter Operating Instructions.

It replaces the "Engaging park position P" section in the chapter on "Driving and parking" - "Automatic transmission".

Keep this Supplement in the vehicle together with the Operating Instructions.

Engaging park position P

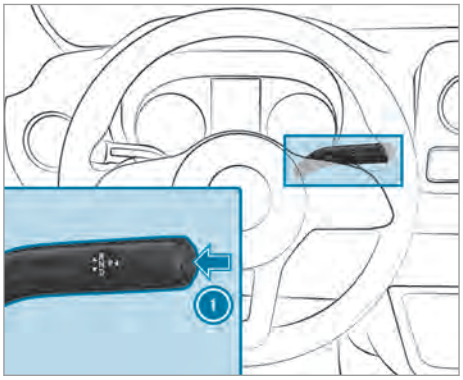

▶ Press button ①.
Transmission position display P is shown in the multifunction display.

Park position P is engaged automatically when one of the following conditions is met:

- you switch off the engine in transmission position D or R.
- you open the driver's door when the vehicle is stationary or when driving at a very low speed and in transmission position D or R.

English (US)

Information on the Operating Instructions

This Supplement is part of the printed and Digital Sprinter Operating Instructions.

It replaces the "Engaging park position P" section in the chapter on "Driving and parking" - "Automatic transmission".

Keep this Supplement in the vehicle together with the Operating Instructions.

Engaging park position P

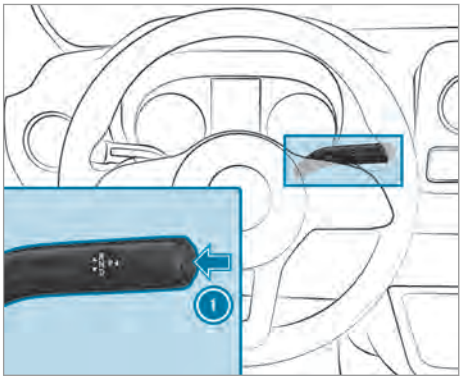

▶ Press button ①.
Transmission position display P is shown in the multifunction display.

Park position P is engaged automatically when one of the following conditions is met:

- You switch off the engine in transmission position D or R.
- You open the driver's door when the vehicle is stationary or when driving at a very low speed and in transmission position D or R.

Passage dans la position parking P

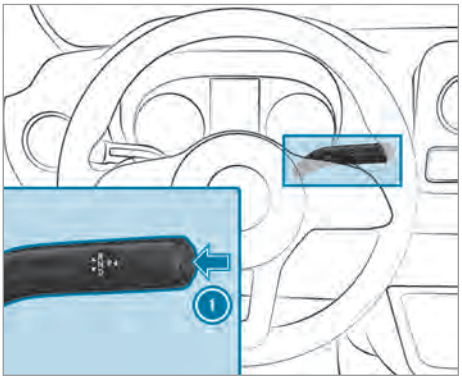

▶ Appuyez sur la touche ①.
L'affichage de la position de la boîte de vitesses sur l'écran multifonction indique P.

La boîte automatique passe automatiquement dans la position parking P si l'une des conditions suivantes est remplie:

- Vous arrêtez le moteur alors que la boîte de vitesses se trouve sur la position D ou R.
- Vous ouvrez la porte conducteur alors que le véhicule est immobilisé ou que vous roulez à très faible vitesse et que la boîte de vitesses se trouve sur la position D ou R.

Français

Information relative à la notice d'utilisation

Ce document annexe fait partie des versions imprimée et numérique de la notice d'utilisation du Sprinter.

Il remplace la section «Passage dans la position parking P» des chapitres «Conduite et stationnement» et «Boîte automatique».

Conservez ce document annexe avec la notice d'utilisation, à bord du véhicule.

Español

Información sobre las Instrucciones de servicio

Este suplemento forma parte de las Instrucciones de servicio impresas y digitales de la Sprinter.

Sustituye allí en el capítulo "Conducción y estacionamiento" - "cambio automático" la sección "Acoplamiento de la posición de estacionamiento P".

Conserve este suplemento en el vehículo junto a las instrucciones de servicio.

Acoplamiento de la posición de aparcamiento P

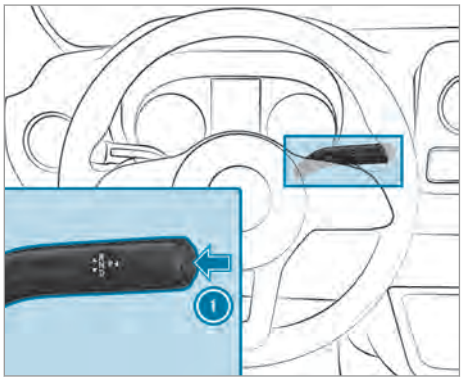

▶ Pulse la tecla ①.
En el visualizador multifunción se muestra la indicación de la posición del cambio P.

Si se cumple una de las siguientes condiciones, se acopla de forma automática la posición de aparcamiento P:

- Si apaga el motor en la posición del cambio D o R.
- Si abre la puerta del conductor al parar o con velocidad de marcha muy reducida en la posición del cambio D o R.

Italiano

Informazioni sulle Istruzioni d'uso

La presente integrazione è parte integrante delle Istruzioni d'uso in versione cartacea e digitale dello Sprinter.

Sostituisce al capitolo "Marcia e parcheggio" - "Cambio automatico" il paragrafo "Inserimento della posizione di parcheggio P".

Conservare la presente integrazione insieme alle Istruzioni d'uso all'interno del veicolo.

Inserimento della posizione di parcheggio P

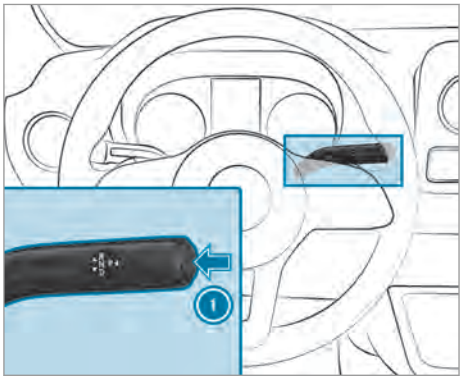

▶ Premere il tasto ①.
Sul display multifunzione l'indicazione della posizione del cambio visualizza la lettera P.

Se una delle seguenti condizioni è soddisfatta, la posizione di parcheggio P viene inserita automaticamente:

- il motore viene spento con il cambio in posizione D o R
- a veicolo fermo o procedendo a velocità molto ridotta con il cambio in posizione D o R viene aperta la porta lato guida.

Português (Portugal)

Informação sobre o Manual do Condutor

O presente aditamento é parte integrante do Manual do Condutor digital e impresso do Sprinter.

Ele substitui a secção "Engrenar a posição de estacionamento P" no capítulo "Condução e estacionamento" - "Caixa de velocidades automática".

Guarde este aditamento no veículo, juntamente com o Manual do Condutor.

Engrenar a posição de estacionamento P

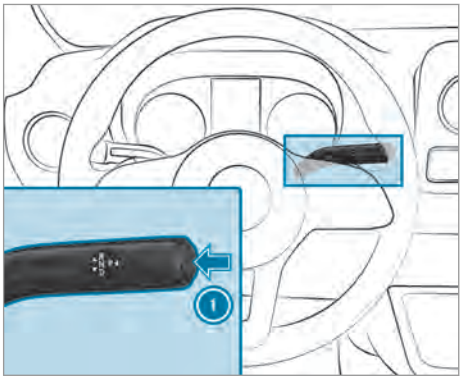

▶ Prima a tecla ①.
A indicação da posição da caixa de velocidades no display multifunções apresenta P.

A posição de estacionamento P é automaticamente engrenada se estiver preenchida uma das seguintes condições:

- O motor é desligado com a posição D ou R da caixa de velocidades.
- A porta do condutor é aberta com o veículo parado ou a uma velocidade de marcha muito baixa na posição D ou R da caixa de velocidades.

Português (Brasil)

Informações sobre o manual de operação

Este complemento faz parte do manual de operação impresso e digital da Sprinter.

Nele é substituída a seção "Posição de estacionamento P" no capítulo "Direção e estacionamento" - "Transmissão automática".

Guarde este suplemento juntamente com o manual de operação no veículo.

Engatar a posição de estacionamento P

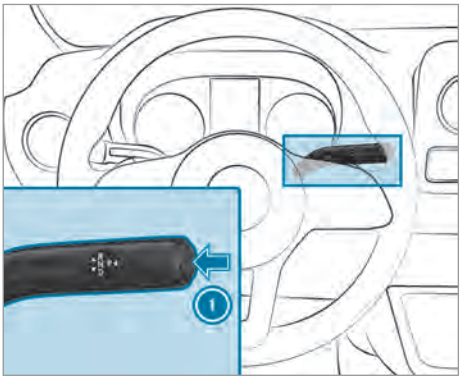

▶ Pressione a tecla ①.
No display multifuncional, a indicação da posição da transmissão indica P.

Se uma das seguintes condições for cumprida, a posição de estacionamento P é engatada automaticamente:

- Você desliga o motor na posição da transmissão D ou R.
- Você abre a porta do motorista, quando parado ou em uma velocidade muito baixa, na posição da transmissão D ou R.

Nederlands

Informatie bij de handleiding

Dit supplement is onderdeel van de gedrukte handleiding en van de digitale handleiding van de Sprinter.

Het vervangt daarbij in het hoofdstuk "Rijden en parkeren" - "Automatische transmissie" het onderdeel "Parkeerstand P inschakelen".

Deze aanvulling samen met de handleiding in het voertuig bewaren.

Parkeerstand P inschakelen

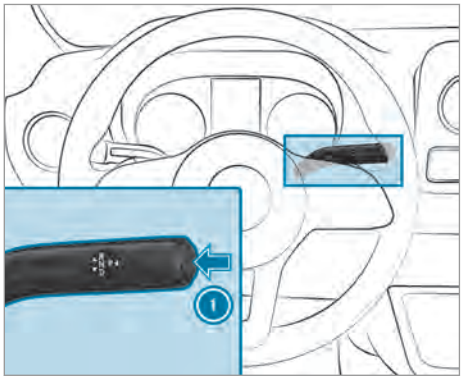

▶ De toets ① indrukken.
Op het multifunctioneel display toont de transmissiestandaanduiding P.

Als aan een van de volgende voorwaarden is voldaan, wordt de parkeerstand P automatisch ingeschakeld:

- De motor wordt afgezet in de transmissiestand D of R.
- De chauffeursdeur wordt geopend als het voertuig stilstaat of met zeer geringe snelheid rijdt in de transmissiestand D of R.

Dansk

Oplysninger om instruktionsbogen

Dette supplement er en del af den trykte og digitale instruktionsbog til Sprinter.

Det erstatter afsnittet "Parkeringspositionarkeringsposition P" i kapitlet "Kørsel og parkering" - "Automatgear".

Opbevar dette tillæg i bilen sammen med instruktionsbogen.

Skift til parkeringsposition P

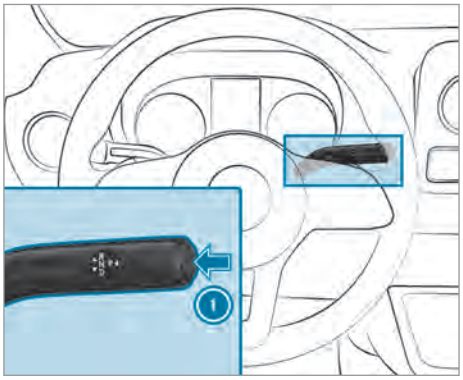

▶ Tryk på knappen ①.
I multifunktionsdisplayet peger gearpositionsindikatoren på P.

Hvis en af de følgende betingelser er opfyldt, vælges parkeringspositionen P automatisk:

- Du standser motoren i gearpositionen D eller R.
- Du åbner førerdøren, mens køretøjet holder stille eller ved meget lav hastighed i gearpositionen D eller R.

Svenska

Information om instruktionsboken

Detta tillägg är en del av den tryckta och digitala instruktionsboken för Sprinter.

Det ersätter där avsnittet ”Lägga i parkeringsläge P” i kapitlet ”Köra och parkera” - ”Automatväxel”.

Förvara detta tillägg i bilen tillsammans med instruktionsboken.

Lägga i parkeringsläget P

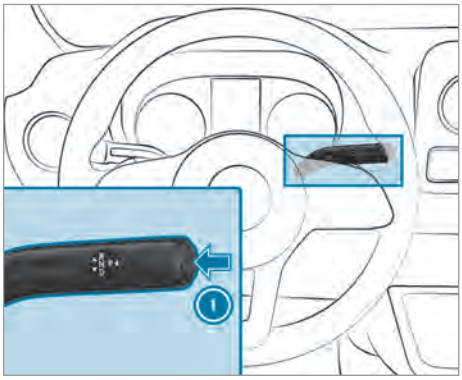

▶ Tryck på knappen ①.
Växelindikeringen på multifunktionsdisplayen visar P.

Om ett av följande villkor är uppfyllda läggs parkeringsläge P i automatiskt:

- Du stänger av motorn i växelläge D eller R.
- Du öppnar förardörren när bilen står stilla eller körs i mycket låg hastighet när växelläge D eller R är ilagt.

Suomi

Käyttöohjeeseen liittyvät tiedot

Tämä täydennys on osa Sprinterin painettua ja digitaalista käyttöohjekirjaa.

Se korvaa luvussa ”Ajaminen ja pysäköiminen” - ”Automaattivaihteisto” osan ”Pysäköintiasennon P kytkeminen”.

Säilytä tätä täydennystä autossa yhdessä käyttöohjekirjan kanssa.

Pysäköintiasennon P kytkeminen

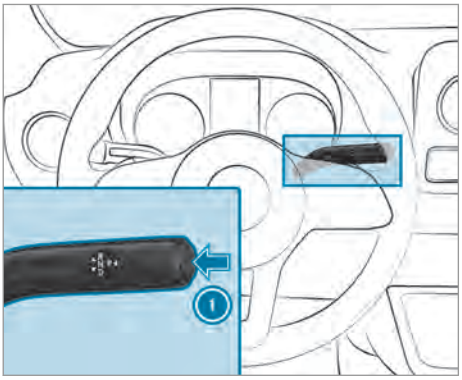

▶ Paina näppäintä ①.
Monitoiminäytön vaihteiston asentonäytössä näkyy P.

Kun yksi seuraavista ehdoista täyttyy, pysäköintiasento P kytkeytyy automaattisesti:

- Moottori sammutetaan vaihteiston asennossa D tai R.
- Kuljettajan ovi avataan pysähdyksissä tai erittäin alhaisessa ajonopeudessa vaihteiston asennossa D tai R.

Norsk

Informasjon om instruksjonsboken

Dette tillegget er en del av den trykte og den digitale instruksjonsboken til Sprinter.

Det erstatter avsnittet "Legge inn parkeringsstilling P" i kapittelet "Kjøring og parkering" - "Automatgirkasse".

Oppbevar tillegget i kjøretøyet sammen med instruksjonsboken.

Sette bilen i parkeringsstilling P

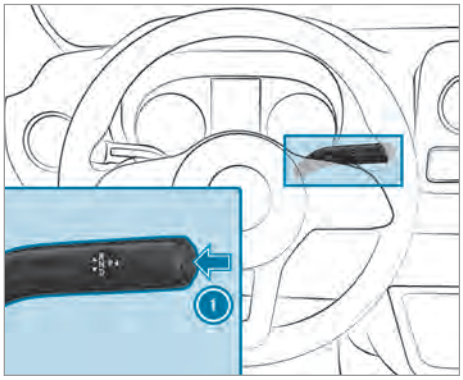

▶ Trykk på knappen ①.
Girtrinnindikatoren i multifunksjonsdisplayet viser P.

Hvis én av følgende betingelser er oppfylt, legges parkeringsstillingen P inn automatisk:

- Du stanser motoren i girstilling D eller R.
- Du åpner førerdøren når bilen står stille eller ved svært lav hastighet i girposisjon D eller R.

Ελληνικά

Πληροφορίες για τις Οδηγίες Χρήσης

Αυτές οι συμπληρωματικές οδηγίες αποτελούν αναπόσπαστο στοιχείο των έντυπων και των ψηφιακών οδηγιών χρήσης Sprinter.

Αντικαθιστά την ενότητα «Επιλογή θέσης στάθμευσης P» στο κεφάλαιο «Οδήγηση και στάθμευση» - «Αυτόματο κιβώτιο ταχυτήτων».

Να φυλάσσετε αυτές τις συμπληρωματικές οδηγίες μαζί με τις Οδηγίες Χρήσης εντός του οχήματος.

Επιλογή θέσης στάθμευσης P

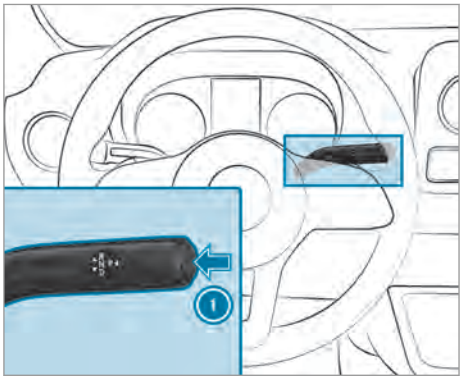

▶ Πατήστε το πλήκτρο ①.
Εμφανίζεται στην οθόνη πολυλειτουργικών ενδείξεων στην ένδειξη θέσης στο κιβώτιο ταχυτήτων η ένδειξη P.

Η θέση στάθμευσης P επιλέγεται αυτόματα αν πληρούται μία από τις παρακάτω προϋποθέσεις:

- Απενεργοποιείτε τον κινητήρα ενώ είναι επιλεγμένη η θέση D ή R στο κιβώτιο ταχυτήτων.
- Ενώ είστε ακινητοποιημένοι ή οδηγείτε με πολύ χαμηλή ταχύτητα και είναι επιλεγμένη η θέση D ή R στο κιβώτιο ταχυτήτων, ανοίγετε την πόρτα οδηγού.

Türkçe

İşletme talimatı ile ilgili bilgi

Bu tamamlayıcı bilgiler, baskılı ve dijital Sprinter işletme talimatının bir parçasıdır.

Bu talimatta, "Aracın kullanılması ve park edilmesi" - "Otomatik şanzıman" başlığı altındaki "P park konumunun seçilmesi" bölümünün yerine geçer.

Bu tamamlayıcı bilgiler ekini, işletme talimatı ile birlikte araçta bulundurun.

P park konumunun seçilmesi

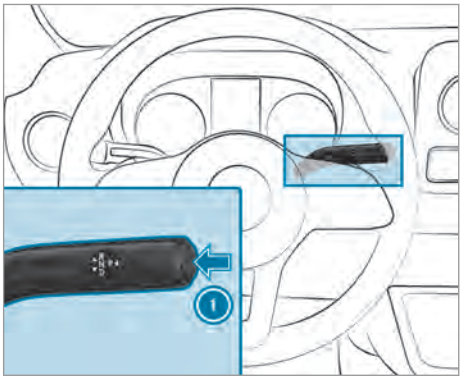

▶ ① tuşuna basın.
Çok fonksiyonlu ekranda, şanzıman konumu göstergesi P gösterir.

Aşağıdaki koşullardan biri yerine getirildiğinde P park konumuna otomatik olarak getirilir:

- Motoru şanzıman konumuna getirdiğiniz D veya R kapattığınızda.
- Araç dururken veya çok düşük hızda şanzıman konumunu D veya R sürücü kapısını açtığınızda.

Română

Informații referitoare la instrucțiunile de exploatare

Această completare face parte din instrucțiunile de exploatare tipărite și în format digital Sprinter.

Înlocuiește în capitolul „Deplasare și parcare” - „Cutie de viteze automată” secțiunea „Cuplarea poziției de parcare P”.

Păstrați această completare împreună cu instrucțiunile de exploatare, în autovehicul.

Cuplarea poziției de parcare P

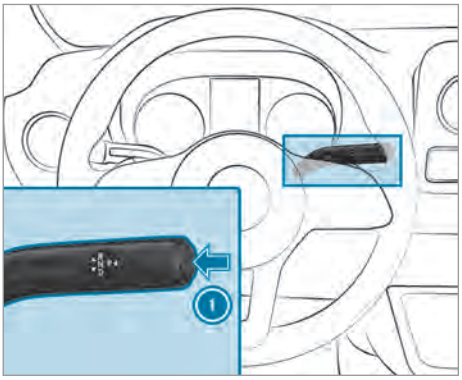

▶ Apăsați tasta ①.
Afișajul poziției cutiei de viteze indică pe Display-ul multifuncțional P.

Dacă este îndeplinită una din următoarele condiții, este cuplată în mod automat poziția de parcare P:

- Opriți motorul în poziția D sau R a cutiei de viteze.
- Deschideți ușa șoferului când autovehiculul staționează sau când rulează cu o viteză foarte mică în poziția D sau R a cutiei de viteze.

Magyar

Információ a kezelési útmutatóhoz

Ez a kiegészítés a Sprinter nyomtatott és digitális kezelési útmutatójához tartozik.

Ott a „Vezetés és parkolás” - „Automatikus sebességváltó” fejezetben a „P parkolási állásba kapcsolás” szegmens helyébe lép.

Ezt a kiegészítést a kezelési útmutatóval együtt tartsa a gépkocsiban.

P parkolási állásba kapcsolás

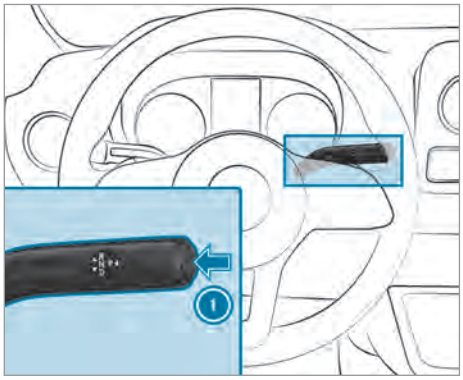

▶ Nyomja meg az ① gombot.
A multifunkciós kijelzőn a sebességváltófokozat-kijelzés a P állást mutatja.

Ha az alábbi feltételek valamelyike teljesül, a sebességváltó automatikusan a P parkolási állásba kapcsol:

- a motort a D vagy az R sebességváltó állásban állítja le,
- a gépkocsi álló helyzetében vagy nagyon alacsony menetsebesség mellett, a sebességváltó D vagy R állásában kinyitja a vezetőajtót.

Čeština

Informace k návodu k obsluze

Tento doplněk je součástí tištěného a digitálního návodu k obsluze vozidla Sprinter.

Nahrazuje v nich v kapitole „Jízda a parkování“–– „Automatická převodovka“ odstavec „Zařazení parkovací polohy P“.

Tento doplněk uchovávejte spolu s návodem k obsluze ve vozidle.

Zařazení parkovací polohy P

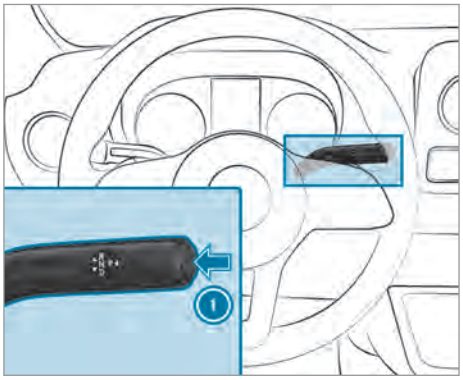

▶ Stiskněte tlačítko ①.
Na multifunkčním displeji se v ukazateli polohy převodovky zobrazí poloha P.

Při splnění některé z následujících podmínek se automaticky zařadí parkovací poloha P:

- Vypnete motor v poloze převodovky D nebo R.
- Ve stojícím vozidle nebo při velice nízké rychlosti jízdy v poloze převodovky D nebo R otevřete dveře řidiče.

Polski

Informacja na temat instrukcji obsługi

Niniejsze uzupełnienie stanowi część drukowanej i cyfrowej instrukcji obsługi pojazdu Sprinter.

Zastępuje tam w rozdziale „Jazda i parkowanie“ - „Automatyczna skrzynia biegów“ sekcję „Włączenie położenia parkingowego P”

Należy przechowywać niniejsze uzupełnienie w pojeździe wraz z instrukcją obsługi.

Włączanie położenia parkingowego P

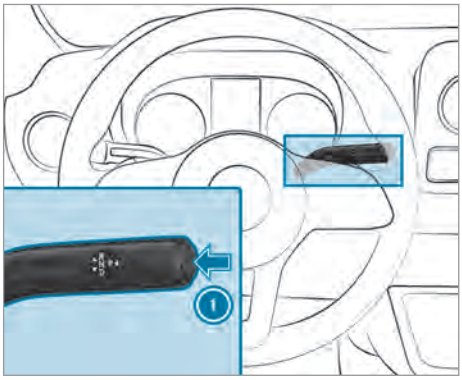

▶ Nacisnąć przycisk ①.
Na wyświetlaczu wielofunkcyjnym wskazanie przełożenia skrzyni biegów jest ustawione na P.

Jeśli jest spełniony jeden z następujących warunków, położenie parkingowe P jest włączane automatycznie:

- Kierowca parkuje pojazd w położeniu skrzyni biegów D lub R.
- Kierowca otworzy swoje drzwi podczas postoju lub przy bardzo niskiej prędkości w położeniu skrzyni biegów D lub R.

Srpski

Informacija o uputstvu za rukovanje

Ova dopuna je sastavni deo štampanog i digitalnog uputstva za rukovanje za Sprinter.

U poglavlju „Vožnja i parkiranje“ - „Automatski menjač“ zamenjuje odeljak „Ubacivanje u parking položaj P“.

Čuvajte ovu dopunu u vozilu, zajedno sa uputstvom za rukovanje.

Ubacivanje u parking položaj P

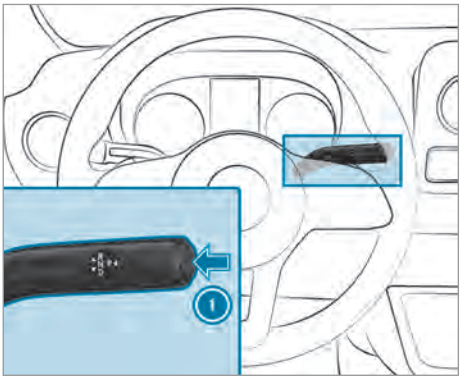

▶ Pritisnite taster ①.
Pokazivač položaja menjača na višenamenskom displeju pokazuje na P.

Ako je jedan od sledećih uslova ispunjen, automatski se ubacuje u parking položaj P:

- Isključili ste motor u položaju menjača D ili R.
- Ako ste otvorili vrata vozača u stanju mirovanja ili pri veoma niskoj brzini vožnje u položaju menjača D ili R.

Eesti

Teave kasutusjuhendi kohta

See lisajuhend on Sprinteri trükitud ja digitaalse kasutusjuhendi osa.

See asendab peatüki „Sõitmine ja parkimine“ - „Automaatkäigukast“ jaotist „Parkimisasendi P sisselülitamine“.

Hoidke seda lisa koos kasutusjuhendiga sõidukis.

Parkimisasendi P sisselülitamine

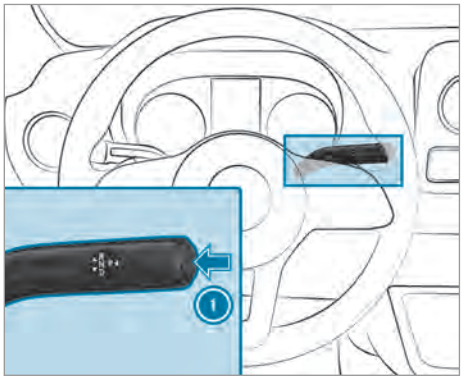

▶ Vajutage nuppu ①.
Käiguasendi näit näitab mitmeotstarbelisel ekraanil asendit P.

Kui üks järgmistest tingimustest on täidetud, lülitub parkimisasend P automaatselt sisse:

- seiskate mootori käiguasendis D või R,
- avate seisval või väga aeglaselt sõitval sõidukil juhiukse, kui käiguasend on D või R.

Latviešu

Informācija par lietošanas pamācību

Šis papildinājums ir Sprinter digitālās un drukātās lietošanas instrukcijas sastāvdaļa.

Tā nodaļā "Braukšana un novietošana stāvēšanai" - "Automātiskā pārnesumkārba" aizstāj sadaļu "Novietošana stāvvietā P ".

Uzglabājiet šo papildinājumu kopā ar oriģinālo lietošanas pamācību automobilī.

Stāvēšanas pozīcijas P ieslēgšana

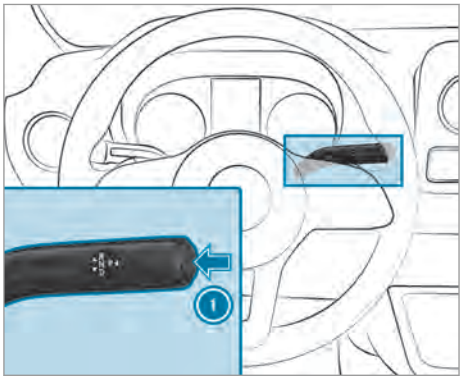

▶ Nospiediet taustiņu ①.
Daudzfunkciju displejā pārnesumkārbas stāvokļa rādījums rāda P.

Ja ir izpildīts kāds no šiem nosacījumiem, stāvēšanas pozīcija P tiek ieslēgta automātiski:

- Jūs izslēdzat motoru, kad pārnesumkārba atrodas pozīcijā D vai R.
- Jūs atverat vadītāja puses durvis, kad automobilis stāv vai arī brauc ļoti lēni, un pārnesumkārba ir ieslēgta pozīcijā D vai R.

Lietuvių k.

Informacija apie eksploatavimo instrukciją

Šis papildymas yra neatskiriama atspausdintos ir skaitmeninės Sprinter naudojimo instrukcijos dalis.

Jis pakeičia skyriuje „Važiavimas ir automobilio pastatymas“ - „Automatinė pavarų perjungimo dėžė“ segmentą „Automobilio pastatymo padėties P įjungimas“.

Šį papildymą laikykite kartu su eksploatavimo instrukcija savo transporto priemonėje.

Automobilio pastatymo padėties P įjungimas

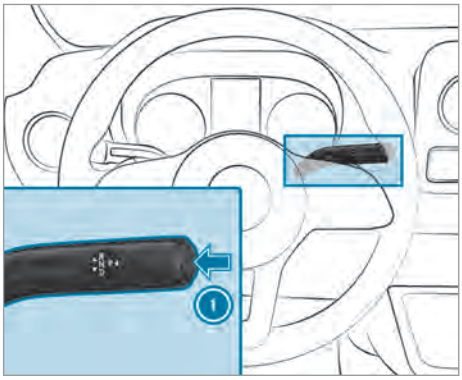

▶ Paspauskite mygtuką ①.
Daugiafunkciame ekrane pavarų dėžės padėties rodmuo rodo P.

Jei įvykdyta viena šių sąlygų, automobilio pastatymo padėtis P įjungiama automatiškai:

- Variklį išjungiate pavarų dėžės padėtyje D arba R.
- Stovint arba esant labai mažam važiavimo greičiui, pavarų dėžės padėtyje D arba R atidarote vairuotojo duris.

Ubacivanje u parkirni položaj P

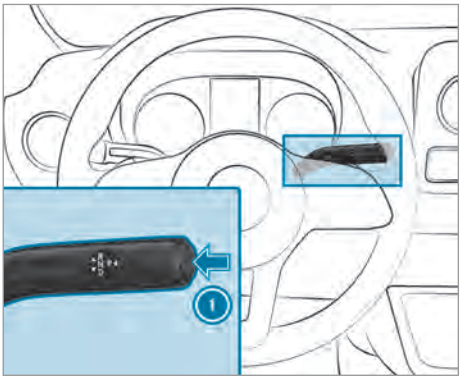

▶ Pritisnite tipku ①.
Na višenamjenskom se zaslonu na prikazu položaja mjenjača prikazuje P.

Ako je ispunjen jedan od sljedećih uvjeta, automatski će se ubaciti u parkirni položaj P:

- Motor isključujete dok je mjenjač u položaju D ili R.
- Otvarate vozačeva vrata dok vozilo miruje ili pri vrlo maloj brzini u položaju mjenjača D ili R.

Hrvatski

Informacije o uputama za rad

Ova dopuna sastavni je dio tiskanih i digitalnih uputa za rad za vozila Sprinter.

Ona zamjenjuje u poglavlju „Vožnja i parkiranje“ - „Automatski mjenjač“ odlomak „Ubacivanje u parkirni položaj P“.

Čuvajte ovu dopunu uputa u vozilu zajedno s uputama za rad.

Slovenščina

Informacije o navodilih za uporabo

Ta dodatek je sestavni del tiskanih in digitalnih navodil za uporabo vozila Sprinter.

V njih v poglavju »Vožnja in parkiranje« – »Samodejni menjalnik« nadomešča razdelek »Vklop parkirnega položaja P«.

Ta dodatek shranite v vozilu skupaj z navodili za uporabo.

Vklop parkirnega položaja P

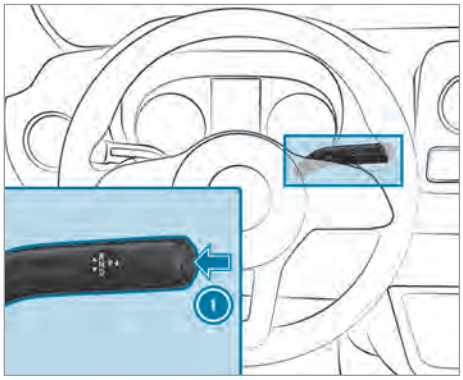

▶ Pritisnite tipko ①.
Prikaz položaja menjalnika na večnamenskem prikazovalniku kaže P.

Parkirni položaj P se samodejno vklopi, če je izpolnjen eden od naslednjih pogojev:

- Motor izklopite v položaju menjalnika D ali R.
- V mirovanju vozila ali pri zelo nizki hitrosti vožnje v položaju menjalnika D ali R odprete voznikova vrata.

Zaradenie parkovacej polohy P

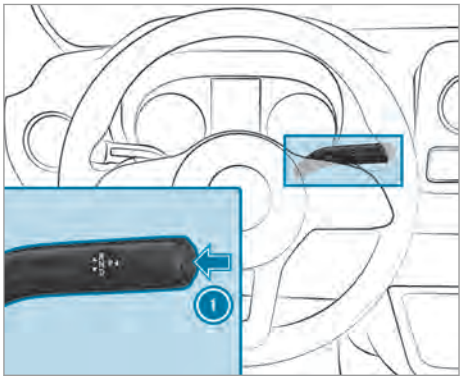

▶ Stlačte tlačidlo ①.
Ukazovateľ polohy prevodovky na multifunkčnom displeji ukazuje na P.

Ak je splnená jedna z nasledujúcich podmienok, automaticky sa zaradí parkovacia poloha P:

- Vypnete motor a prevodovka je v polohe D alebo R.
- Prevodovka je v polohe D alebo R a na stojacom vozidle alebo pri veľmi nízkej rýchlosti jazdy otvoríte dvere vodiča.

Slovenčina

Informácie o návode na obsluhu

Tento doplnok je súčasťou vytlačeného aj digitálneho návodu na obsluhu vozidiel Sprinter.

Nahrádza časť Zaradenie parkovacej polohy P v kapitole Jazdenie a parkovanie – Automatická prevodovka.

Tento doplnok spolu s návodom na obsluhu treba mať stále vo vozidle.

한국어

사용 설명서 관련 정보

이 부록은 Sprinter 사용 설명서 책자 및 디지털 사용 설명서의 일부입니다.

이 부록은 사용 설명서의 "주행 및 주차" - "자동 변속기" 단원 중 "주차 위치 P로 변속" 편에 기재된 내용을 대체합니다.

이를 사용 설명서와 함께 차량 내에 보관하십시오.

주차 위치 P로 변속

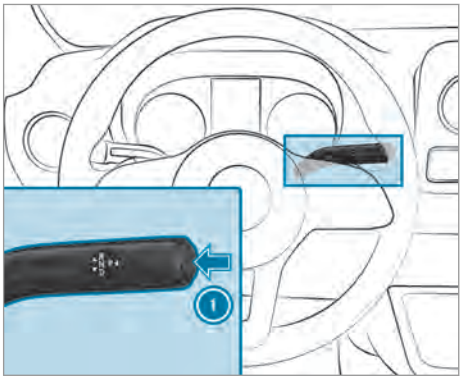

▶ 버튼 ①을 누르십시오.
다기능 디스플레이에 변속 레버가 P 위치로 표시됩니다.

다음 조건 중 하나가 충족되면 주차 위치 P로 자동 변속됩니다.

- 변속 레버가 D 또는 R 위치에 있을 때 엔진을 끈 경우
- 정지 상태 또는 매우 낮은 주행 속도에서 변속 레버가 D 또는 R 위치에 있을 때 운전석 도어를 연 경우

Tiếng Việt

Thông tin về hướng dẫn sử dụng

Bổ sung này là một phần của hướng dẫn sử dụng Sprinter bản in và bản kỹ thuật số.

Nó thay thế phần „Gài số đậu xe P “ trong chương „Lái xe và đỗ xe“ - „Hộp số tự động“.

Bảo quản tài liệu bổ sung này cùng với Hướng dẫn sử dụng trên xe.

Chọn số đậu xe P

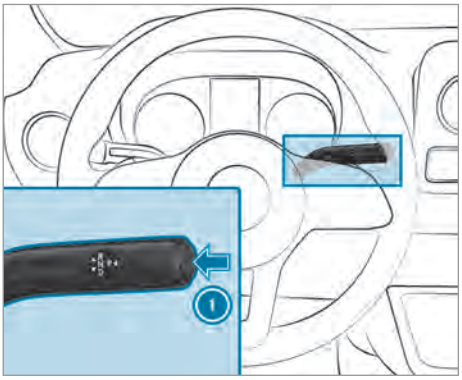

▶ Nhấn nút ①.
Vị trí cần số P hiện trên màn hình hiển thị đa chức năng.

Nếu một trong số các điều kiện sau đây được đáp ứng, số đậu xe P sẽ tự động được chọn:

- Bạn tắt động cơ ở vị trí số D hoặc R.
- Khi xe đứng yên hoặc đang lái với tốc độ rất thấp ở vị trí số D hoặc R, bạn hãy mở cửa xe ở bên phía người lái.

Bahasa Indonesia

Informasi mengenai panduan pengoperasian

Penjelasan ini merupakan bagian dari panduan pengoperasian Sprinter versi cetak dan digital.

Penjelasan ini menggantikan "Transmisi otomatis" bagian "Memindahkan ke posisi parkir P“ dalam bab "Berkendara dan memarkir".

Simpan penjelasan ini bersama dengan panduan pengoperasian dalam kendaraan.

Memindahkan ke posisi parkir P

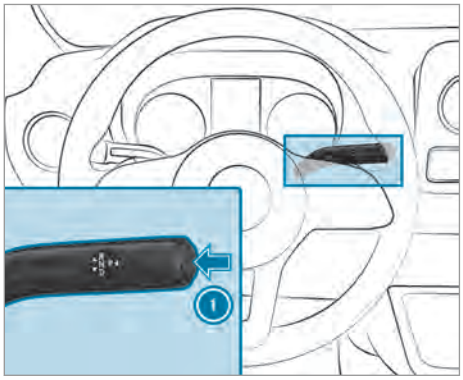

▶ Tekan tombol ①.
Posisi transmisi P akan ditampilkan pada display multifungsi.

Transmisi akan berpindah secara otomatis ke posisi parkir P jika salah satu kondisi berikut terpenuhi:

- Mesin dimatikan dengan transmisi berada pada posisi D atau R.
- Pintu pengemudi dibuka pada saat kendaraan berhenti atau saat kendaraan melaju dengan kecepatan yang sangat rendah pada posisi transmisi D atau R.

ภาษาไทย

ข้อมูลเกี่ยวกับคู่มือการใช้งาน

ข้อมูลเพิ่มเติมนี้เป็นส่วนหนึ่งของคู่มือการใช้งานรถยนต์รุ่น Sprinter แบบพิมพ์และแบบดิจิทัล

โดยใช้แทนหัวข้อ "การเข้าเกียร์ตำแหน่งจอด P" ในบท "การขับขี่และ-การจอด" - "เกียร์อัตโนมัติ"

โปรดเก็บข้อมูลเพิ่มเติมฉบับนี้ไว้กับคู่มือการใช้งานในรถยนต์

การเข้าเกียร์ตำแหน่งจอด P

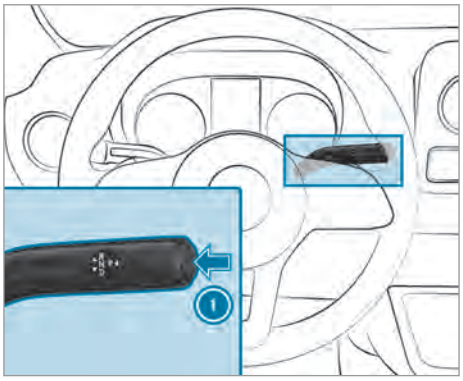

▶ กดปุ่ม ①
จอแสดงตำแหน่งเกียร์บนจอแสดงผลมัลติฟังก์ชันจะแสดงตำแหน่ง P

ระบบจะเปลี่ยนไปยังตำแหน่งจอด P โดยอัตโนมัติ เมื่อปฏิบัติตามเงื่อนไขข้อใดข้อหนึ่งดังต่อไปนี้:

- ดับเครื่องยนต์เมื่อเกียร์อยู่ในตำแหน่ง D หรือ R
- เปิดประตูคนขับในขณะที่รถยนต์หยุดนิ่งหรือขณะกำลังขับขี่ด้วย-ความเร็วต่ำมากในตำแหน่งเกียร์ D หรือ R

Български

Информация към ръководството за експлоатация

Това допълнение е част от печатното ръководство за експлоатация и от дигитално ръководство за експлоатация на Sprinter.

То заменя в тях в глава "Шофиране и паркиране" - "Автоматична предавателна кутия" раздел "Включване на позиция за паркиране".

Съхранявайте това допълнение в автомобила заедно с ръководството за експлоатация.

Включване на позиция за паркиране P

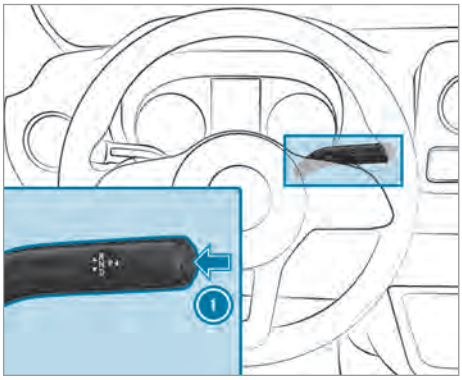

▶ Натиснете бутон ①.
Индикацията за позицията на предавателната кутия на мултифункционалния дисплей показва P.

Ако е изпълнено някое от следващите условия, позицията за паркиране P се включва автоматично:

- Изключвате двигателя в позиция на предавателната кутия D или R.
- Отваряте вратата на водача при спрял автомобил или при много ниска скорост на шофиране в позиция на предавателната кутия D или R.

Українська

Інформація щодо посібника з експлуатації

Це доповнення є складовою друкованого та цифрового посібника з експлуатації Sprinter.

Там воно замінює у розділі «Рух та паркування» - «Автоматичні коробки передач» частину «Встановлення паркувального положення P». «

Зберігайте це доповнення разом з посібником з експлуатації у автомобілі.

Встановлення паркувального положення P

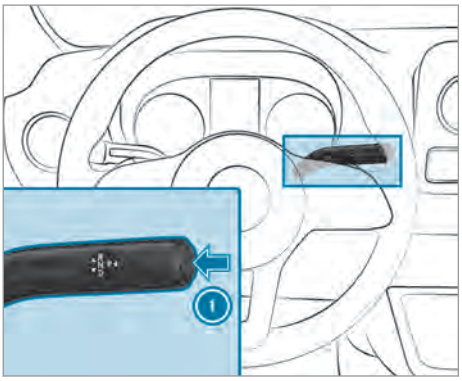

▶ Натисніть кнопку ①.
Індикація положення коробки передач на багатофункціональному дисплеї вказує на P.

Якщо виконано одну з зазначених нижче умов, паркувальне положення P встановлюється автоматично:

- Ви зупиняєте двигун у положенні коробки передач D або R.
- Якщо автомобіль зупинено, або якщо він рухається з дуже малою швидкістю, а коробку передач встановлено в положення D або R, якщо ви відкриваєте двері водія.

Русский

Информация для руководства по эксплуатации

Данное дополнение является составной частью печатного и электронного руководства по эксплуатации модели Sprinter.

Оно заменяет раздел «Включение парковочного положения P» в главе «Движение и парковка – автоматическая коробка передач».

Храните это дополнение в автомобиле вместе с руководством по эксплуатации.

Включение парковочного положения «P»

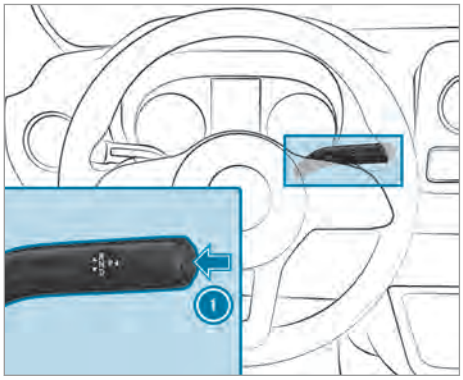

▶ Нажмите кнопку (1).
На мультифункциональном дисплее появится индикация положения АКП P.

Если выполнено одно из следующих условий, парковочное положение P включится автоматически:

- Вы выключаете двигатель при положении АКП D или R.
- Вы открываете дверь водителя в остановленном или движущемся на небольшой скорости автомобиле при положении АКП D или R.

עברית

מידע על ספר הרכב

תוספת זו מהווה חלק ממספר הרכב המודפס והדיגיטלי של דגם Sprinter.

הוא משלים שם בחלק „נסיעה וחנייה" - „תיבת הילוכים אוטומטית" את סעיף „שילוב מצב החנייה P".

שמור את החוברת המשלימה הזו יחד עם ספר הרכב בתוך הרכב.

שילוב למצב חנייה P

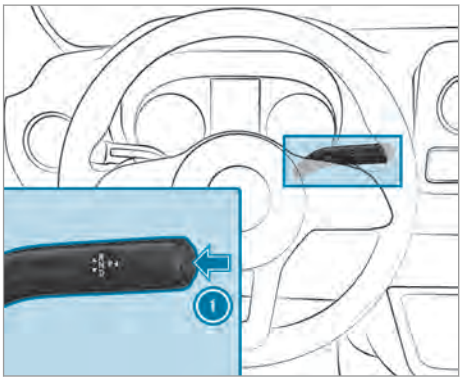

◀ לחץ על הלחצן ①.
בצג הרב-תכליתי מופיע חיווי מצב תיבת ההילוכים על P.

כאשר אחד התנאים הבאים מתמלא, מצב החנייה P ישולב אוטומטית:

- אתה מדומם את המנוע במצב תיבת ההילוכים D או R.
- פתחת את דלת הנהג כאשר הרכב עומד במקום או במהירות נהיגה נמוכה מאוד במצב תיבת ההילוכים D או R.

العربية

معلومات بخصوص دليل التشغيل

يعتبر هذا الملحق جزءاً لا يتجزء من دليل التشغيل المطبوع والرقمي لسيارة Sprinter.

هذا يكمل هناك في الفصل „القيادة وصف السيارة" - „ناقل الحركة الأوتوماتيكي" الفصل „تعشيق وضع صف السيارة P".

احتفظ بهذه التكملة مع دليل التشغيل في السيارة.

تعشيق وضع صف السيارة P

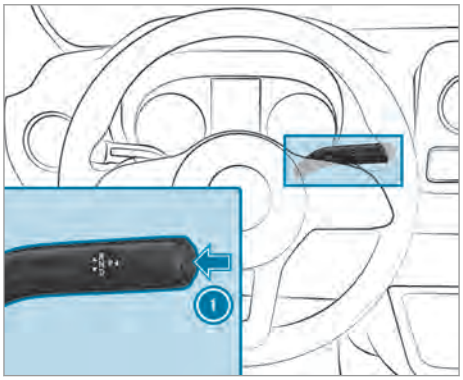

◀ اضغط الزر ①.
في وحدة العرض متعددة الوظائف يشير بيان وضع ناقل الحركة على P.

عندما تتوفر الشروط التالية، يتم تعشيق وضع صف السيارة P أوتوماتيكياً:

- عندما تقوم بإيقاف المحرك في وضع ناقل الحركة D أو R.
- تقوم بفتح باب السائق أثناء توقف السيارة أو في سرعة سير منخفضة للغاية في وضع ناقل الحركة D أو R.

Sprinter

Operating Instructions

Mercedes-Benz

Front-passenger airbag warning

Example

WARNING Risk of injury or fatal injuries if the front-passenger airbag is enabled

If the front-passenger front airbag is enabled, a child on the front-passenger seat may be struck by the front-passenger airbag during an accident.

NEVER use a rearward-facing child restraint system on a seat with an ENABLED FRONT AIRBAG, DEATH or SERIOUS INJURY to the CHILD can occur.

Observe the "Children in the vehicle" section.

Welcome to the world of Mercedes-Benz

Before you first drive off, read these Operating Instructions carefully and familiarize yourself with your vehicle. For your own safety and a longer vehicle life, follow the instructions and warning notices in these Operating Instructions. Disregarding them may result in damage to the vehicle or environment or in personal injury.

Vehicle damage caused by failure to observe the instructions is not covered by the New Vehicle Limited Warranty.

The equipment or model designation of your vehicle may vary according to:

- Model
- Order
- National version
- Availability

Mercedes-Benz reserves the right to introduce changes in:

- Design
- Equipment
- Technical features

Therefore, the description may differ from your vehicle in some cases.

The following are integral parts of the vehicle:

- Printed Operating Instructions
- Maintenance Booklet
- Equipment-dependent supplements

Always keep these documents in the vehicle. If you sell the vehicle, always pass all documents on to the new owner.

Daimler VANS USA, LLC

Mercedes-Benz Canada, Inc.

A Daimler Company

9075844103

Symbols **4**

At a glance **6**
Cockpit 6
Instrument cluster 7
Overhead control panel 10
Door control panel 14
Emergencies and breakdowns 16

General notes **18**
Environmental protection 18
Mercedes-Benz Genuine Parts 18
Information about attachments, add-on equipment, installations and conversions 19
Operating Instructions 20
Service and vehicle operation 20
Operating safety 21
Declarations of conformity 22
Diagnostics connection 22
Notes on changes to the engine output 23
Qualified specialist workshop 23
Vehicle registration 23
Correct use of the vehicle 23
Multi Purpose Vehicle 24
Information on problems with your vehicle 24
Reporting safety defects 24
Limited Warranty 24
QR codes for rescue card 24
Data storage 25
Copyright 27

Occupant safety **28**
Restraint system 28
Seat belts 30
Airbags 32
Children in the vehicle 34
Notes on pets in the vehicle 40

Opening and closing **41**
SmartKey 41
Doors 44
Sliding door 45
Electrical sliding door 46
Rear-end doors 50
Partition sliding door 51
Electrical step 52
Side window 53
Anti-theft protection 55

Seats and stowage **59**
Correct driver's seat position 59
Seats 59
Adjusting the steering wheel 71
Stowage areas 72
Bottle holder 74
Cup holder 74
Ashtray and cigarette lighter 74
Sockets 75
Wirelessly charging the mobile phone and coupling with the exterior antenna 77
Installing or removing the floor mats 78

Light and vision **79**
Exterior lighting 79
Adjusting the interior lighting 81
Changing bulbs 83
Windshield wipers 88
Mirrors 90
Using sun visors 92

Climate control **93**
Overview of climate control systems 93
Operating climate control systems 95
Operating air vents 98
Auxiliary heating 99
Operating cargo compartment ventilation 102

Driving and parking **103**
Driving 103
Battery main switch 114
Automatic transmission 115
All-wheel drive 118
DSR (Downhill Speed Regulation) 120
Electronic level control 121
Refueling 125
Parking 132
Driving and driving safety systems 136
Work mode 151
Trailer operation 151

Instrument Display and on-board computer **158**
Overview of Instrument Display 158
Overview of the buttons on the steering wheel 159
Operating the on-board computer 159
Overview of the displays on the multi-function display 160
Setting the instrument lighting 161

Menus and submenus 161

Mercedes PRO 164
Information about Mercedes PRO 164
Information about Mercedes PRO connect 164
Making a call via the overhead control panel 164
Information on the Roadside Assistance call via the overhead control panel 164
Information on Mercedes PRO connect accident management 165
Transmitted data during a breakdown assistance call 165

Transporting 166
Notes on loading guidelines 166
Load distribution 167
Securing loads 167
Carrier systems 169
Using the interior roof carrier system 170
Placing a load on the wheel arch 172

Maintenance and care 173
ASSYST PLUS service interval display 173
Engine compartment 173
Cleaning and care 181

Breakdown assistance 187
Emergency 187
Emergency Call System 187
Flat tire 188
Battery 189
Towing or tow-starting 195
Electrical fuses 199
Vehicle tool kit 200
Hydraulic jack 201

Wheels and tires 202
Information on noise or unusual driving characteristics 202
Notes on regularly inspecting wheels and tires 202
Information on driving with summer tires 202
Information on M+S tires 203
Notes on snow chains 203
Tire pressure 204
Loading the vehicle 210
Tire labeling 213
Information on definitions (tires and loading) 216
Changing a wheel 218
Spare wheel 225

Technical data 230
Information on technical data 230
On-board electronics 230
Vehicle identification plate, vehicle identification number (VIN) and engine number 231
Operating fluids and capacities 233
Vehicle data 241
Trailer hitch 241
Lashing points and carrier systems 245

Display messages and warning and indicator lamps 247
Display messages 247
Indicator and warning lamps 266

Index 276

In these Operating Instructions, you will find the following symbols:

DANGER Danger due to not observing the warning notices

Warning notices draw your attention to hazards that may endanger your health or life, or the health or life of others.

▶ Observe the warning notices.

ENVIRONMENTAL NOTE Environmental damage due to failure to observe environmental notes

Environmental notes include information on environmentally responsible behavior or environmentally responsible disposal.

▶ Observe environmental notes.

NOTE Damage to property due to failure to observe notes on material damage

Notes on material damage inform you of risks which may lead to your vehicle being damaged.

▶ Observe notes on material damage.

ⓘ These symbols indicate useful instructions or further information that could be helpful to you.

▶	Instructions
(→ page)	Further information on a topic
Display	Display in the multifunction display/ media display
⟶	Highest menu level to be selected in the multimedia system
▶▶	Corresponding submenus to be selected in the multimedia system
*	Indicates a cause

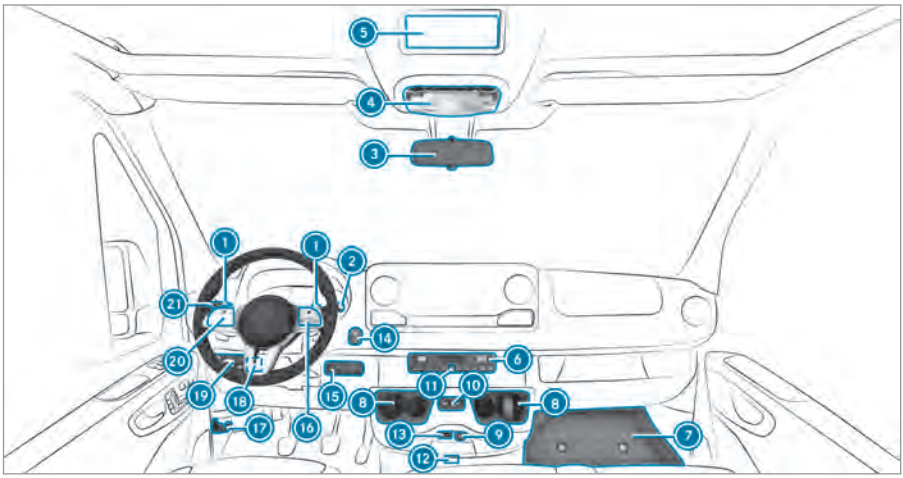

1 Steering wheel paddle shifters	→	117
2 DIRECT SELECT lever	→	115
3 Inside rearview mirror	→	91
4 Overhead control panel	→	81
5 DIN slot, e.g. for mounting the timer for the stationary heater		
6 Climate control system	→	93
7 Stowage compartment cover	→	200
8 Cup holder	→	74
9 12 V socket	→	75
10 Opens and closes the electric sliding door	→	47
11 Switches the hazard warning lights on and off	→	80
12 Vehicles with KEYLESS START: SmartKey slot		
13 USB port	→	73
14 Start/stop button	→	104
15 Right-hand switch panel		
Activates/deactivates all-wheel drive	→	119
Engages/disengages LOW RANGE	→	119
Activates/deactivates DSR	→	120
Raises/lowers the vehicle level	→	123
Activates/deactivates working speed control (ADR)	→	151
Activates/deactivates cargo compartment ventilation	→	102
16 Steering wheel buttons	→	159
17 Opens the hood	→	173
18 Left-hand switch panel		
Sets the working speed (ADR)	→	151
19 Light switch		
Headlamp range adjuster		
20 Steering wheel buttons	→	159
21 Combination switch		
Turn signals	→	80
High beam	→	80
Windshield wipers	→	88
Rear window wiper	→	89

Instrument Display (color display)

1	Speedometer	→	158
2	ESP®	→	267
3	Distance warning	→	273
4	Seat belt not fastened	→	272
5	Turn signal indicators	→	80
6	Multifunction display	→	267
7	Tire pressure loss warning lamp	→	267
8	Check Engine	→	273
9	Preglow and malfunction in preglow system		
10	Tachometer	→	158
11	PARK and (USA) or (Canada) parking brake is applied (red)	→	267
12	BRAKE and (USA) or (Canada) brakes (red)	→	267
13	Electrical malfunction	→	273
14	Coolant temperature indicator and coolant too hot	→	273
15	Electric parking brake (yellow)	→	267
16	Restraint system	→	28
17	High beam	→	80
18	Low beam	→	79
19	Parking lights	→	79
20	Fuel level indicator and fuel reserve with fuel filler cap location indicator	→	273
21	Fog light	→	79
22	Rear fog light	→	79
23	Brakes (yellow)	→	267
24	ABS malfunction	→	267
25	ESP® deactivated	→	267

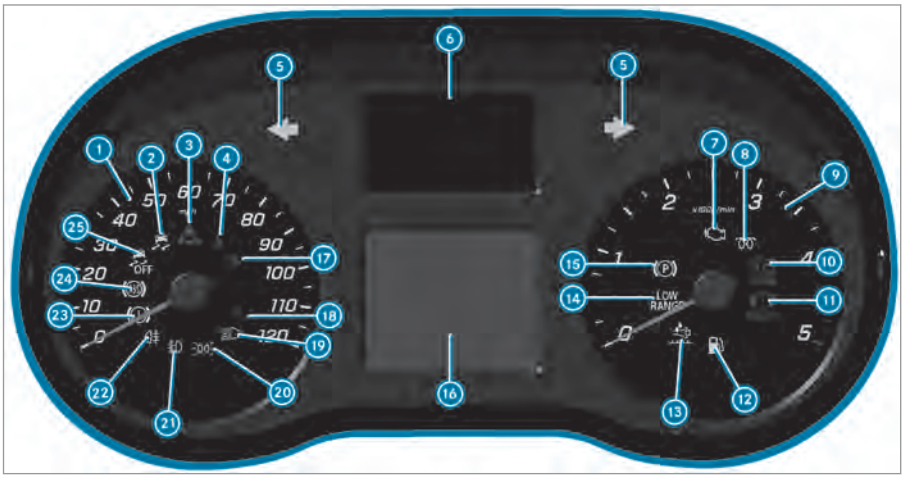

Instrument Display (black and white display) with steering wheel buttons

1 Speedometer	→	158
2 ESP®	→	267
3 Distance warning	→	273
4 Seat belt not fastened	→	272
5 Turn signal indicators	→	80
6 Display of warning and indicator lamps		
At least one door is not completely closed		
Tire pressure loss	→	267
Power-assisted steering malfunction	→	273
Electrical malfunction	→	273
SOS/emergency call system (Mercedes-Benz emergency call system)		
Active Brake Assist deactivated	→	141
ATTENTION ASSIST deactivated	→	147
OFF Lane Keeping Assist inactive	→	151
Highbeam Assist	→	81
(White) Lane Keeping Assist active and ready to issue warnings / (Red) Lane Keeping Assist issues warning	→	151
7 Check Engine	→	273
8 Preglow and malfunction in preglow system		
9 Tachometer		
10 PARK and (USA) or (Canada) parking brake is applied (red)	→	267
11 BRAKE and (USA) or (Canada) brakes (red)	→	267
12 Reserve fuel	→	273
13 DEF supply low	→	127
14 LOW RANGE LOW RANGE active	→	119
15 Electric parking brake (yellow)	→	267
16 Multifunction display	→	267
17 Restraint system	→	28
18 High beam	→	80
19 Low beam	→	79
20 Parking lights	→	79
21 Fog light	→	79
22 Rear fog light	→	79

23	Brakes (yellow)	→	267
24	ABS malfunction	→	267
25	ESP® deactivated	→	267

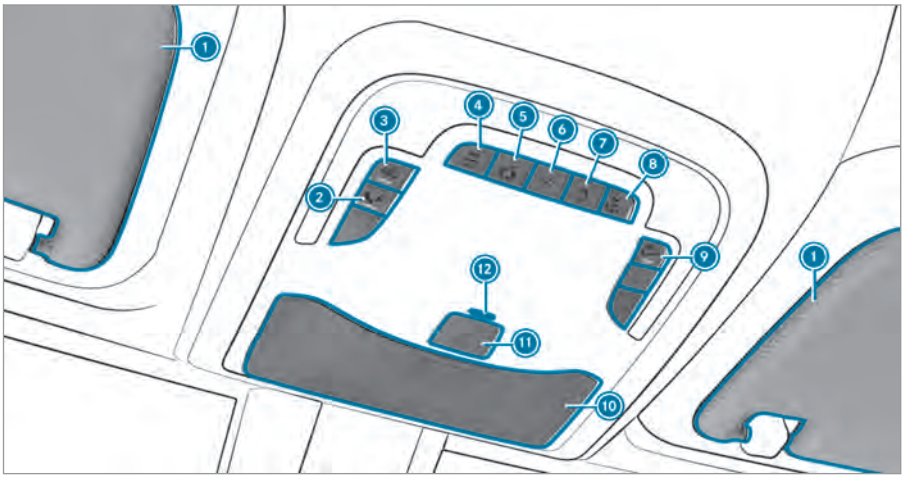

Version 1 of the overhead control panel

1 Sun visor	→	92
2 Breakdown assistance call button (Mercedes PRO connect)		
3 Activates/deactivates the interior motion sensor	→	57
Activates/deactivates the bus interior lighting		
4 Switches the left-hand reading light on/off		
5 Switches automatic light control on/off		
6 Switches the front interior lighting on/off		
7 Switches the rear interior lighting on/off		
8 Switches the right-hand reading light on/off		
9 Switches tow-away alarm on/off	→	57
10 Glasses compartment	→	74
11 SOS emergency call system		
12 ATA indicator lamp		

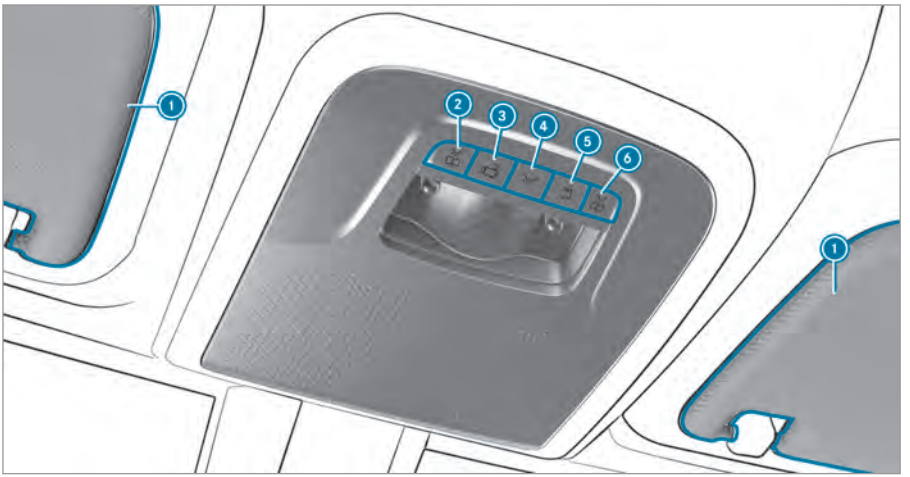

Version 2 of the overhead control panel

1. Sun visor → 92
2. Switches the left-hand reading light on/off
3. Switches automatic light control on/off
4. Switches the front interior lighting on/off
5. Switches the rear interior lighting on/off
6. Switches the right-hand reading light on/off

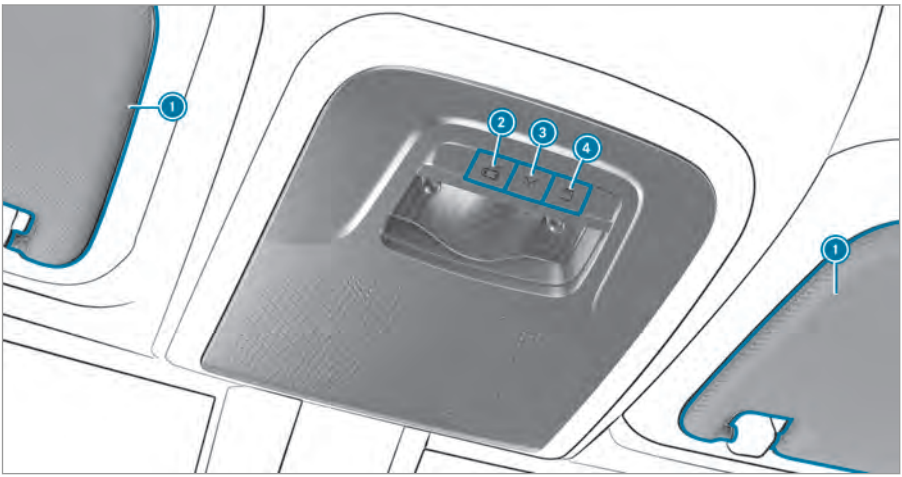

Version 3 of the overhead control panel

1 Sun visor → 92

2 Switches automatic light control on/off

3 Switches the front interior lighting on/off → 57

4 Switches the rear interior lighting on/off

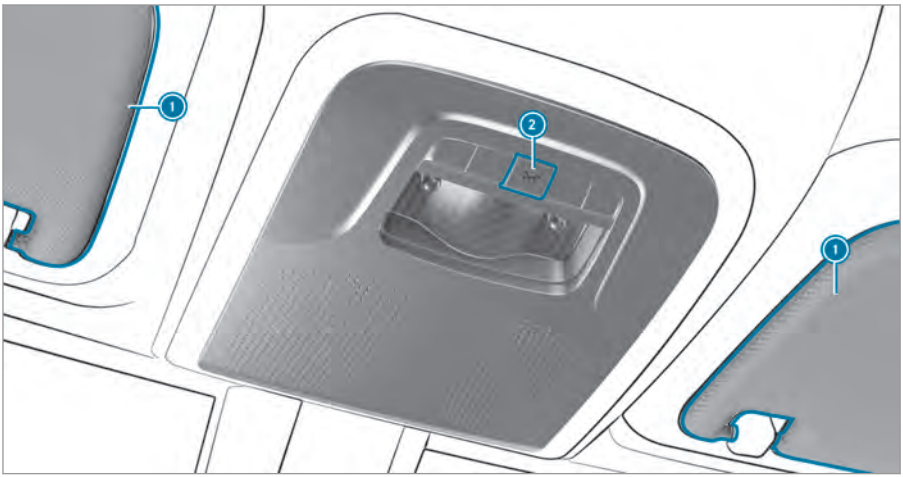

Version 4 of the overhead control panel

1	Sun visor	→ 92
2	Switches the interior lighting on/off	

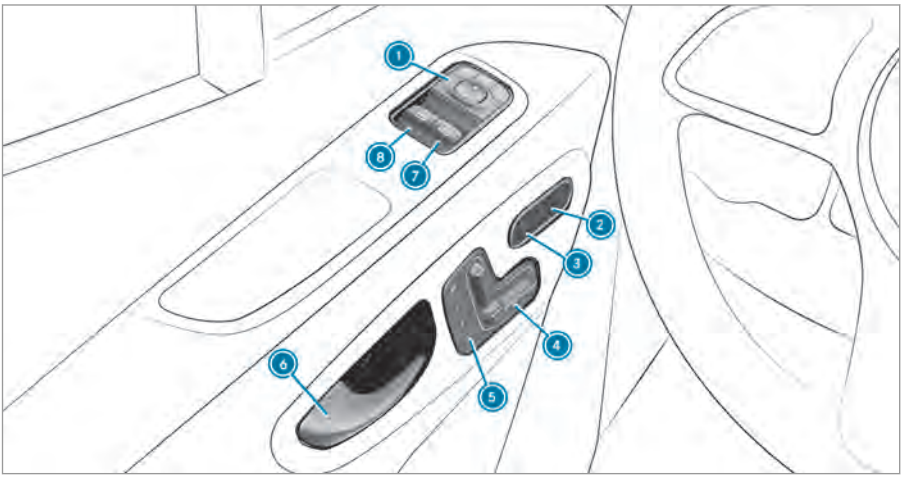

Door control panel in vehicles with electrically adjustable seats

1 To adjust the outside mirrors	→	90
2 To activate/deactivate the central locking system	→	45
3 To switch seat heating on/off	→	70
4 To adjust the front seats electronically	→	62
5 To operate the memory function	→	64
6 To open a door	→	44
7 To open/close the right-hand side window	→	53
8 To open/close the left-hand side window	→	53

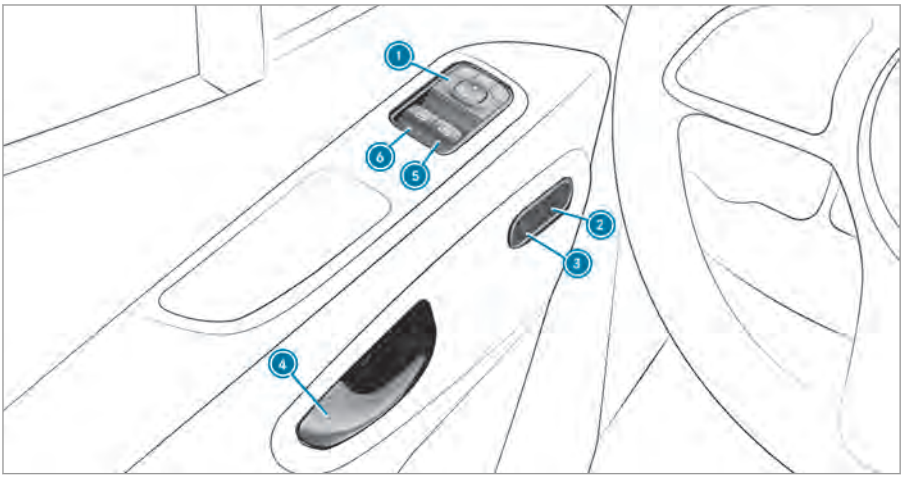

Door control panel vehicles without electrically adjustable seats

1 To adjust the outside mirrors	→	90
2 To activate/deactivate the central locking system	→	45
3 To switch seat heating on/off	→	70
4 To open a door	→	44
5 To open/close the right-hand side window	→	53
6 To open/close the left-hand side window	→	53

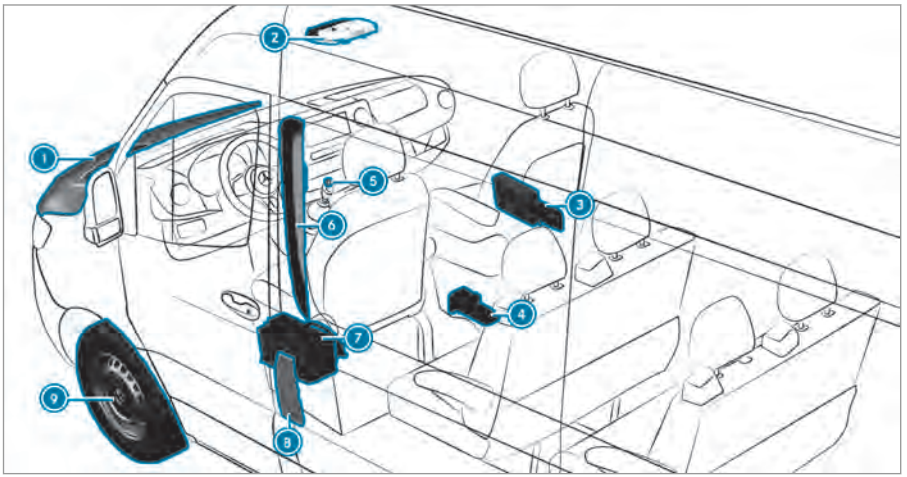

1 Checking and topping up operating fluids	→	233
Starting assistance	→	190
2 Buttons for the SOS emergency call system and roadside assistance	→	188
3 Warning lamp	→	187
Safety vest	→	187
First-aid kit (soft sided)	→	187
4 Vehicles with rear-wheel drive: hydraulic jack and tire-change tool kit	→	201
5 Hazard warning lights	→	80
6 QR code for accessing the rescue card	→	24
7 To disconnect the starter battery	→	193
8 Fuel filler flap with instruction labels for tire pressure, fuel type and QR code for accessing the rescue card	→	125
9 Flat tire	→	188

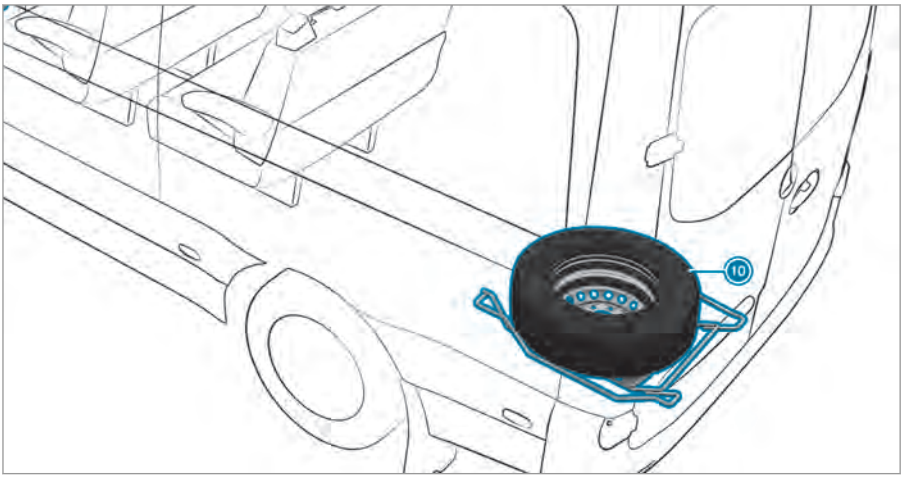

10 Spare wheel (example) → 225

Environmental protection

ENVIRONMENTAL NOTE Environmental damage due to operating conditions and personal driving style

The pollutant emission of your vehicle is directly related to the vehicle's operation.

You can make a contribution to environmental protection by operating your vehicle in an environmentally responsible manner. To do this, observe the following recommendations on operating conditions and your personal driving style.

Operating conditions:

- ▶ Make sure that the tire pressures are always correct.
- ▶ Do not transport any unnecessary weight (e.g. a roof rack which is no longer required).
- ▶ Observe the service intervals.
  A regularly serviced vehicle will contribute to environmental protection.
- ▶ Always have maintenance work carried out at a qualified specialist workshop.

Personal driving style:

- ▶ Do not depress the accelerator pedal when starting the engine.
- ▶ Do not warm up the engine while stationary.
- ▶ Drive carefully and maintain a sufficient distance to other vehicles.
- ▶ Avoid frequent, sudden acceleration and braking.
- ▶ Shift gears in good time and use each gear only up to ⅔ of its maximum engine speed.
- ▶ Switch off the engine when in stationary traffic for a prolonged time.
- ▶ Drive in a fuel-efficient manner. Pay attention to the ECO display for a fuel-efficient driving style.

Environmental issues and recommendations

It is recommended to regenerate and recycle substances instead of immediately disposing of them.

The relevant environmental guidelines and regulations serve to protect the environment and should be followed carefully.

Mercedes-Benz Genuine Parts

ENVIRONMENTAL NOTE Environmental damage caused by not using recycled reconditioned components

Daimler AG offers recycled reconditioned components and parts with the same quality as new parts. The same entitlement from the Limited Warranty is valid as for new parts.

- ▶ Use recycled reconditioned components and parts from Daimler AG.

NOTE The effectiveness of the restraint systems can be impaired by installing accessory parts, performing repairs or welding operations

Airbags, Emergency Tensioning Devices as well as control units and sensors for the restraint systems can be installed in the following areas of the vehicle:

- Door frames
- Roof frames
- Doors
- Door pillars
- Door sills
- Seats
- Cockpit
- Instrument cluster
- Center console

- ▶ Do not install any accessories such as audio systems in these areas.
- ▶ Do not perform repairs or welding operations.
- ▶ Have accessory parts installed at a qualified specialist workshop.

If you use parts, tires, wheels or safety-relevant accessories which have not been approved by Mercedes-Benz, the operating safety of the vehicle may be jeopardized. Safety-relevant systems, e.g. the brake system, may malfunction. Only use Mercedes-Benz Genuine Parts or parts of equal quality. Use only tires, wheels and accessory parts that are approved for your vehicle model.

Mercedes-Benz tests original parts, conversion parts and accessory parts that have been approved for your vehicle model for reliability, safety and suitability. Despite ongoing market research, we are unable to assess other parts.

We therefore accept no responsibility for the use of such parts in Mercedes-Benz vehicles, even if they have been officially approved or independently approved by a testing center.

In some other countries, certain parts are only officially approved for installation or modification if they comply with legal requirements. All Mercedes-Benz Genuine Parts satisfy these requirements. Make sure that all parts are suitable for your vehicle.

Always specify the vehicle identification number (VIN) and the engine number when ordering Mercedes-Benz Genuine Parts (→ page 231).

Information about attachments, add-on equipment, installations and conversions

For safety reasons, have add-on equipment produced and assembled in accordance with the valid Mercedes-Benz add-on equipment guidelines. These add-on equipment guidelines ensure that the chassis and add-on equipment form one unit and that the greatest possible level of operational and driving safety is achieved.

Both vehicle manufacturers as well as body manufacturers must always ensure that the products manufactured by them come into circulation only in a safe state and do not pose any risks to people. Otherwise, there may be consequences under civil, criminal or public law. All manufacturers are responsible for the products that they have manufactured. The manufacturer of attachments, add-on equipment, inserts and conversions must guarantee compliance with Directive 2001/95/EC on general product safety.

Mercedes-Benz recommends the following for safety reasons:

- Do not make any other changes to the vehicle.
- Obtain approval from the dealer named on the inside title page in the event of deviations from the approved add-on equipment guidelines.

Acceptance tests performed by public test bodies or official approvals do not rule out safety risks.

Observe the information about Mercedes-Benz Genuine Parts (→ page 18).

ⓘ Further information can be obtained at a qualified specialist workshop.

⚠ **WARNING** Risk of accident and injury in the event of incorrect conversions or changes to the vehicle

Conversions or changes to the vehicle can impair the function of systems or components.

As a result, they may no longer function as intended and/or endanger the operating safety of the vehicle.

▶ Always have conversions or changes to the vehicle made at a qualified workshop.

If you are planning on making changes to your vehicle, we highly recommend that you contact the dealer named on the inside title page, who will give you all the information you need. There may be a charge for this service.

If add-on equipment manufacturers and dealers make modifications that affect the final inspection of the engine, vehicle or equipment, they must accept sole responsibility for the vehicle. This also applies to marking and documenting the vehicle parts affected by the changes that they make.

You are responsible for certifying and providing evidence that the following conditions are met:

- the vehicle complies with all relevant standards and regulations that are affected by the modification.
- the modified vehicle still meets the vehicle safety standards and emission regulations.
- the modification does not impair the safety of the vehicle.

We are not responsible for the final inspection, product liability or warranty claims resulting from modification. This applies to:

- the modified components or systems.
- the resultant violation of emission regulations or vehicle safety standards.
- all consequences resulting from the modified , less safe or even faulty vehicle.

We accept no responsibility as final manufacturer or for the resultant product liability.

Even seemingly minor changes to the vehicle, such as attaching a radiator grill in winter, are not permitted. Do not cover the radiator. Do not use any thermal mats, insect protection covers etc.

Otherwise, the values of the vehicle's diagnostic system will be distorted. Some of these values are prescribed by law and must be correct at all times.

The factory equips the vehicle with a wooden or plastic cargo compartment floor; this is an integral part of the vehicle structure. If you have the cargo compartment floor removed, the vehicle body may be damaged. Load securing will then be impaired and the maximum loading capacity of the tie-down points will no longer be guaranteed. Therefore, do not have the cargo compartment floor removed.

Notes on the partition

Without a partition, vehicles that are approved as commercial vehicles (N1, N2) do not fulfill ISO 27956, which describes the equipment for properly securing a load in delivery vehicles. If the vehicle is used to transport goods, retrofitting the partition is strongly recommended, as properly securing the load in vehicles without a partition will always be a complex operation.

Operating Instructions

These Operating Instructions describe all models and all standard and special equipment available for your vehicle at the time these Operating Instructions went to press. Country-specific differences are possible. Note that your vehicle may not be equipped with all functions described. This is also the case for systems and functions relevant to safety. Therefore, the equipment on your vehicle may differ from that in the descriptions and illustrations.

The original purchase agreement documentation for your vehicle contains a list of all the systems in your vehicle.

Should you have any questions concerning equipment and operation, consult an authorized Mercedes-Benz Center.

The Operator's Manual and Maintenance Booklet are important documents and should be stored in the vehicle.

Note on vehicles which are equipped by body manufacturers

Always observe the body manufacturer's Operating Instructions. You could otherwise fail to recognize dangers.

Service and vehicle operation

Warranty

The Limited Warranty for your vehicle is in accordance with the warranty terms and conditions in the Service and Warranty Information booklet.

Your authorized Mercedes-Benz Center will replace and repair all factory-installed parts in accordance with the terms of the following warranty terms and conditions:

- New Vehicle Limited Warranty
- Exhaust System Warranty
- Emission Systems Warranty
- California, Connecticut, Maine, Massachusetts, New York, Pennsylvania, Rhode Island and Vermont Emission Control System Warranty
- State Warranty Enforcement Laws ("Lemon Laws")

Replacement parts and accessories are covered by the Mercedes-Benz Parts and Accessories Warranties.

These are available at any authorized Mercedes-Benz Center.

ⓘ Should you lose your Service and Warranty Information booklet, have an authorized Mercedes-Benz Center arrange for a replacement. The new Service and Warranty Information booklet will be posted to you.

Vehicle operation outside the USA or Canada

When you are traveling abroad with your vehicle, observe the following points:

- service points or replacement parts may not be available immediately.
- unleaded fuel for vehicles with a catalytic converter may not be available. Leaded fuel can cause damage to the catalytic converter.
- the fuel may have a considerably lower octane number. Unsuitable fuel can cause engine damage.

Certain Mercedes-Benz models are available in Europe through the European Delivery Program.

For more information, please consult an authorized Mercedes-Benz Center, or write to one of the following addresses:

In the USA:

Daimler VANS USA, LLC
European Delivery Department
One Mercedes-Benz Drive
Sandy Springs, GA 30328

In Canada:

Mercedes-Benz Canada, Inc.
European Delivery Department
98 Vanderhoof Avenue
Toronto, Ontario M4G 4C9

Maintenance information

Your customer service advisor will record every service for you in the Service and Warranty Information booklet.

Information on Roadside Assistance

Roadside Assistance offers technical help in the event of a breakdown. Your calls to the toll-free Roadside Assistance Hotline are answered by our agents 24 hours a day, 365 days a year.

1-877-762-8267 (USA)

1-800-387-0100 (Canada)

You can find further information in the Roadside Assistance brochure (USA) or the "Roadside Assistance" section in the Service and Warranty booklet (Canada). You will find both in the vehicle document wallet.

Information on changing address or owner

In the event of a change of address, please send us the "Notification of Address Change" in the Service and Warranty Information booklet or simply call the Customer Assistance Center (USA) at the hotline number 1-877-762-8267 or Customer Service (Canada) at 1-800-387-0100. So, if necessary, we can reach you in a timely fashion.

If you sell your Mercedes, please leave the entire literature in the vehicle so that it is available to the next owner. If you have purchased a used vehicle, please send us the "Notification of Purchase of Used Car" in the Service and Warranty Information booklet or call the Customer Assistance Center (USA) at the hotline number 1-877-762-8267 or Customer Service (Canada) at 1-800-387-0100.

Possible danger due to substances hazardous to health

In compliance with Proposition 65 ("Prop65"), the following detachable label has been added to each vehicle sold in California:

WARNING

Operating, servicing and maintaining a passenger vehicle, pickup truck, van or off-road motor vehicle can expose you to chemicals including engine exhaust, carbon monoxide, phthalates, and lead, which are known to the State of California to cause cancer and birth defects or other reproductive harm. To minimize exposure, avoid breathing exhaust, do not idle the engine except as necessary, service your vehicle in a well-ventilated area and wear gloves or wash your hands frequently when servicing your vehicle. For more information go to www.P65Warnings.ca.gov/passenger-vehicle

A 000 817 82 02

Operating safety

WARNING Risk of accident due to malfunctions or system failures

If you do not have the prescribed service/maintenance work or any required repairs carried out, this could result in malfunctions or system failures.

▶ Always have the prescribed service/maintenance work as well any required repairs carried out at a qualified specialist workshop.

WARNING Risk of accident and injury as a result of incorrect modifications to electronic component parts

Modification to electronic components, their software or wiring could impair their function and/or the function of other networked component parts. In particular, systems relevant to safety could also be affected.

As a result, they may no longer function as intended and/or endanger the operating safety of the vehicle.

▶ Never tamper with the wiring and electronic component parts or their software.

▶ You should have all work on electrical and electronic components carried out at a qualified specialist workshop.

Observe the "Vehicle electronics" section in the "Technical data".

⚠ **WARNING** Risk of fire due to flammable materials on hot parts of the exhaust system

Flammable material such as leaves, grass or twigs may ignite if they come into contact with hot parts of the exhaust system.

▶ When driving on unpaved roads or off-road, regularly check the vehicle underside.

▶ Remove trapped plants or other flammable material.

▶ If there is damage, consult a qualified specialist workshop immediately.

! **NOTE** Damage to the vehicle

In the following situations, in particular, there is a risk of damage to the vehicle:

- The vehicle becomes grounded, e.g. on a high curb or an unpaved road
- The vehicle is driven too fast over an obstacle, e.g. a curb, speed bump or pothole
- A heavy object strikes the underbody or chassis components

In situations such as this, the body, the underbody, chassis components, wheels or tires could be damaged without the damage being visible. Components damaged in this way can unexpectedly fail or, in the case of an accident, may not absorb the loads that arise as intended.

If the underbody paneling is damaged, flammable materials such as leaves, grass or twigs can collect between the underbody and the underbody paneling. These materials may ignite if they come into contact with hot parts on the exhaust system.

▶ Have the vehicle checked and repaired immediately at a qualified specialist workshop.

or

▶ If driving safety is impaired while continuing your journey, pull over and stop the vehicle immediately in accordance with the traffic conditions, and contact a qualified specialist workshop.

Declarations of conformity

Information about the declaration of conformity for wireless vehicle components

USA: "The wireless devices of this vehicle comply with Part 15 of the FCC Rules. Operation is subject to the following two conditions: 1) These devices may not cause harmful interference, and 2) These devices must accept any interference received, including interference that may cause undesired operation. Changes or modifications not expressly approved by the party responsible for compliance could void the user's authority to operate the equipment."

Canada: "The wireless devices of this vehicle comply with Industry Canada license-exempt RSS standard(s). Operation is subject to the following two conditions: (1) These devices may not cause interference, and (2) These devices must accept any interference, including interference that may cause undesired operation of the device."

USA: "Wireless charging system for mobile devices (model: WMI2 Wireless Mobile Interface): this device complies with Part 18 of the FCC Rules."

The name and address of the responsible party is:

peiker acustic GmbH

Max-Planck-Str. 28-32

61381 Friedrichsdorf

Germany

Diagnostics connection

The diagnostics connection is only intended for the connection of diagnostic devices at a qualified specialist workshop.

⚠ **WARNING** Risk of accident due to connecting devices to the diagnostics connection

If you connect equipment to a diagnostics connection in the vehicle, it may affect the operation of vehicle systems.

As a result, the operating safety of the vehicle could be affected.

▶ Only connect equipment to a diagnostics connection in the vehicle which is approved for your vehicle by Mercedes-Benz.

WARNING Risk of accident due to objects in the driver's footwell

Objects in the driver's footwell may impede pedal travel or block a depressed pedal.

This jeopardizes the operating and road safety of the vehicle.

- ▶ Stow all objects in the vehicle securely so that they cannot get into the driver's footwell.
- ▶ Always install the floor mats securely and as prescribed in order to ensure that there is always sufficient room for the pedals.
- ▶ Do not use loose floor mats and do not place floor mats on top of one another.

NOTE Battery discharging from using devices connected to the diagnostics connection

Using devices at the diagnostics connection drains the battery.

- ▶ Check the charge level of the battery.
- ▶ If the charge level is low, charge the battery, e.g. by driving a considerable distance.

Connecting equipment to the diagnostics connection can lead to emissions monitoring information being reset, for example. This may lead to the vehicle failing to meet the requirements of the next emissions inspection during the main inspection.

Notes on changes to the engine output

Output increases can:

- change the emission values.
- lead to malfunctions.
- result in consequential damage.

The operating safety of the engine is not guaranteed in all situations.

Any tampering with the engine management in order to increase the engine output will lead to the loss of the New Vehicle Limited Warranty and other warranty entitlements.

If you sell the vehicle, inform the buyer of any alterations to the vehicle's engine output. If you do not inform the buyer, this may constitute a punishable offense under national legislation.

Qualified specialist workshop

A qualified specialist workshop has the necessary special skills, tools and qualifications to correctly carry out any necessary work on your vehicle. This particularly applies to safety-relevant works.

Always have the following work on the vehicle carried out at a qualified specialist workshop:

- safety-relevant works
- service and maintenance work
- repair work
- modifications as well as installations and conversions
- work on electronic component parts

Mercedes-Benz recommends that you use an authorized Mercedes-Benz Center for this purpose.

Vehicle registration

Mercedes-Benz may ask its service center to carry out technical inspections on certain vehicles. The quality or safety of the vehicle is improved as a result of the inspection.

Mercedes-Benz can only inform you about vehicle checks if it Mercedes-Benz has your registration data.

In the following cases your vehicle may not be registered to you yet:

- You did not purchase your vehicle at an authorized specialist dealer.
- Your vehicle has not yet been inspected at an authorized Mercedes-Benz Center.

It is advisable to register your vehicle with an authorized Mercedes-Benz Center.

Inform Mercedes-Benz as soon as possible about any change in address or vehicle ownership.

You can do this, for example, at an authorized Mercedes-Benz Center.

Correct use of the vehicle

If you remove warning stickers, others may fail to recognize the dangers. Leave warning stickers in position.

Observe the following information in particular when operating the vehicle:

- Safety notes in these Operating Instructions
- Technical data for the vehicle

- Traffic rules and regulations
- Laws pertaining to motor vehicles and safety standards

Multi Purpose Vehicle

⚠ **WARNING** Risk of accident due to a high center of gravity

As a result of the high center of gravity the vehicle can skid or rollover in the event of abrupt steering movements and/or inappropriate speed.

▶ Adapt the speed and the driving style to the driving characteristics of the vehicle as well as the prevailing road and weather conditions.

Utility vehicles have a significantly higher rollover rate than other types of vehicles.

If this vehicle is not operated in a safe manner it could result in an accident, rollover as well as to severe or fatal injuries.

In a rollover crash, an unbelted person is significantly more likely to die than a person wearing a seat belt.

You and all vehicle occupants should always wear a seat belt.

Information on problems with your vehicle

If you should experience a problem with your vehicle, particularly one that you believe may affect its safe operation, we urge you to contact an authorized Mercedes-Benz Center immediately to have the problem diagnosed and rectified.

If the problem is not resolved to your satisfaction, please contact an authorized Mercedes-Benz Center again or write to one of the following addresses.

In the USA:

Daimler VANS USA, LLC

Customer Assistance Center

One Mercedes-Benz Drive

Sandy Springs, GA 30328

In Canada:

Mercedes-Benz Canada, Inc.

Customer Relations Department

98 Vanderhoof Avenue

Toronto, Ontario M4G 4C9

Reporting safety defects

USA only:

The following text is published as required of manufacturers under Title 49, Code of U.S. Federal Regulations, Part 575 pursuant to the "National Traffic and Motor Vehicle Safety Act of 1966".

If you believe that your vehicle has a defect which could cause a crash or could cause injury or death, you should immediately inform the National Highway Traffic Safety Administration (NHTSA) in addition to notifying Daimler VANS USA, LLC.

If NHTSA receives similar complaints, it may open an investigation, and if it finds that a safety defect exists in a group of vehicles, it may order a recall and remedy campaign. However, NHTSA cannot become involved in individual problems between you, your dealer, or Daimler VANS USA, LLC.

To contact NHTSA, you may call the Vehicle Safety Hotline toll-free at 1-888-327-4236 (TTY: 1-800-424-9153); go to http://www.safercar.gov, or write to Administrator, NHTSA, 400 Seventh Street, SW., Washington, DC 20590, USA.

You can find more information on vehicle safety under: http://www.safercar.gov

Limited Warranty

! **NOTE** Damage to the vehicle arising from violation of these operating instructions.

Damage to the vehicle can arise from violation of these operating instructions.

Such damage is not covered by either the Limited Warranty or the new or used-vehicle warranty.

▶ Observe the instructions in these operating instructions on proper operation of your vehicle as well as regarding possible vehicle damage.

QR codes for rescue card

The QR code stickers are affixed to the B-pillar on the driver's and front-passenger side. In the event of an accident, emergency services can use the QR code to quickly determine the corresponding rescue card for your vehicle. The current rescue

card contains, in compact form, the most important information about your vehicle e.g. the routing of electric cables.

Further information can be found at http://www.mercedes-benz.de/qr-code.

Data storage

Electronic control units

Electronic control units are installed in your vehicle. Some of these are necessary for the safe operation of your vehicle, while some assist you when driving (driver assistance systems). In addition, your vehicle provides comfort and entertainment functions, which are also made possible by electronic control units.

The electronic control units contain data memories which can temporarily or permanently store technical information about the vehicle's operating state, component loads, maintenance requirements and technical events or malfunctions.

In general, this information documents the state of a component part, a module, a system or the surroundings such as:

- operating states of system components (e.g. fluid levels, battery status, tire pressure)
- status messages concerning the vehicle and its individual components (e.g. number of wheel revolutions/speed, deceleration, lateral acceleration, display of the fastened seat belts)
- malfunctions or defects in important system components (e.g. lights, brakes)
- information on events leading to vehicle damage
- system reactions in special driving situations (e.g. airbag deployment, intervention of stability control systems)
- ambient conditions (e.g. temperature, rain sensor)

In addition to providing the actual control unit function, this data assists the manufacturer in detecting and rectifying malfunctions and optimizing vehicle functions. The majority of this data is temporary and is only processed in the vehicle itself. Only a small portion of the data is stored in the event or malfunction memory.

When your vehicle is serviced, technical data from the vehicle can be read out by service network employees (e.g. workshops, manufacturers) or third parties (e.g. breakdown services). Services include repair services, maintenance processes, warranty claims and quality assurance measures, for example. The read out is performed via the legally prescribed port for the diagnostics connection in the vehicle. The respective service network locations or third parties collect, process and use this data. They document technical statuses of the vehicle, assist in finding malfunctions and improving quality and are transmitted to the manufacturer, if necessary. Furthermore, the manufacturer is subject to product liability. For this, the manufacturer requires technical data from vehicles.

Malfunction memories in the vehicle can be reset by a service outlet as part of repair or maintenance work.

Depending on the selected equipment, you can import data into vehicle convenience and infotainment functions yourself.

This includes, for example:

- multimedia data such as music, films or photos for playback in an integrated multimedia system
- address book data for use in connection with an integrated hands-free system or an integrated navigation system
- entered navigation destinations
- data about the use of Internet services

This data can be saved locally in the vehicle or it is located on a device which you have connected to the vehicle (e.g. smartphone, USB flash drive or MP3 player). If this data is stored in the vehicle, you can delete it at any time. This data is sent to third parties only at your request, particularly when you use online services in accordance with the settings that you have selected.

You can store or change convenience settings/individualization in the vehicle at any time.

Depending on the equipment, this includes, for example:

- seat and steering wheel position settings
- suspension and climate control settings
- Individualization such as interior lighting

If your vehicle is accordingly equipped, you can connect your smartphone or another mobile end device to the vehicle. You can control this by means of the control elements integrated in the vehicle. Images and audio from the smartphone can be output via the multimedia system. Certain

information is simultaneously transferred to your smartphone.

Depending on the type of integration, this can include:

- general vehicle data
- position data

This allows you to use selected apps on your smartphone, such as navigation or music playback. There is no further interaction between the smartphone and the vehicle; in particular, vehicle data is not directly accessible. Which type of further data processing occurs is determined by the provider of the specific app used. Which settings you can make, if any, depends on the specific app and the operating system of your smartphone.

Online services

Wireless network connection
If your vehicle has a wireless network connection, data can be exchanged between your vehicle and other systems. The wireless network connection is enabled via the vehicle's transmission and reception unit or via connected mobile end devices (e.g. smartphones). Online functions can be used via this wireless network connection. These include online services and applications/apps, which are provided by the manufacturer or by other providers.

Manufacturer's own services
In the case of the manufacturer's online services, the manufacturer describes the functions in a suitable place (e.g. operating instructions, manufacturer's website) and provides the associated information subject to data protection legislation. Personal identification data may be used to provide online services. The data exchange for this takes place via a secure connection, e.g. with the manufacturer's IT systems intended for the purpose. The collecting, processing, and use of personal identification data beyond the provision of services occurs exclusively on the basis of a legal permit or after due consent.

Generally, you can activate or deactivate the services and functions (partly subject to a fee). In some cases, this also applies to the whole data connection of the vehicle. Excluded from this are special legally prescribed functions and services.

Services of third parties
If it is possible to use online services from other providers, these services are subject to the data protection and terms of use of the responsible provider. The manufacturer has no influence on the contents exchanged whilst using these services.

Please ask the respective service provider for details on the type, extent and purpose of the collection and use of personal data in the context of third party services.

Event Data Recorders

USA only:

This vehicle is equipped with an event data recorder (EDR). The main purpose of an EDR is to record, in certain crash or near crash-like situations, such as an air bag deployment or hitting a road obstacle, data that will assist in understanding how a vehicle's systems performed. The EDR is designed to record data related to vehicle dynamics and safety systems for a short period of time, typically 30 seconds or less.

The EDR in this vehicle is designed to record such data as:

- How various systems in your vehicle were operating;
- Whether or not the driver and passenger safety belts were buckled/fastened;
- How far (if at all) the driver was depressing the accelerator and/or brake pedal; and,
- How fast the vehicle was traveling.

This data can help provide a better understanding of the circumstances in which crashes and injuries occur. NOTE: EDR data are recorded by your vehicle only if a non-trivial crash situation occurs; no data are recorded by the EDR under normal driving conditions and no personal data (e.g. name, gender, age and crash location) are recorded. However, other parties such as law enforcement could combine the EDR data with the type of personally identifying data routinely acquired during a crash investigation.

Access to the vehicle and/or the EDR is needed to read data that is recorded by an EDR, and special equipment is required. In addition to the vehicle manufacturer, other parties that have the special equipment, such as law enforcement, can read the information by accessing the vehicle or the EDR.

EDR data may be used in civil and criminal matters as a tool in accident reconstruction, accident claims and vehicle safety. Since the Crash Data Retrieval CDR tool that is used to extract data from the EDR is commercially available, Daimler

Vans USA, LLC ("DVUSA") expressly disclaims any and all liability arising from the extraction of this information by unauthorized Mercedes-Benz personnel.

DVUSA will not share EDR data with others without the consent of the vehicle owners or, if the vehicle is leased, without the consent of the lessee. Exceptions to this representation include responses to subpoenas by law enforcement; by federal, state or local government; in connection with or arising out of litigation involving DVUSA or its subsidiaries and affiliates; or, as required by law.

Warning: The EDR is a component of the Restraint System Module. Tampering with, altering, modifying or removing the EDR component may result in a malfunction of the Restraint System Module and other systems.

State laws or regulations regarding EDRs that conflict with federal regulation are pre-empted. This means that in the event of such conflict, the federal regulation governs. As of December 2016, 17 states have enacted laws relating to EDRs.

Copyright

Information on free and open-source software

Information on license for free and open-source software used in your vehicle can be found on the data storage medium in your vehicle document wallet and with updates on the following website:

http://www.mercedes-benz.com/opensource.

Information on registered trademarks

- Bluetooth® is a registered trademark of Bluetooth SIG Inc.
- DTS™ is a registered trademark of DTS, Inc.
- Dolby® and MLP™ are registered trademarks of DOLBY Laboratories.
- BabySmart™, ESP® and PRE-SAFE® are registered trademarks of Daimler AG.
- HomeLink® is a registered trademark of Johnson Controls.
- iPod® and iTunes® are registered trademarks of Apple Inc.
- Burmester® is a registered trademark of Burmester Audiosysteme GmbH.
- Microsoft® and Windows Media® are registered trademarks of Microsoft Corporation.
- SIRIUS® is a registered trademark of Sirius XM Radio Inc.
- HD Radio™ is a registered trademark of iBiquity Digital Corporation.
- Gracenote® is a registered trademark of Gracenote, Inc.
- ZAGATSurvey® and related brands are registered trademarks of ZagatSurvey, LLC.

Restraint system

Protection by the restraint system

The restraint system includes the following components:

- Seat belt system
- Airbags
- Child restraint system
- Child seat securing systems

The restraint system can help prevent the vehicle occupants from coming into contact with parts of the vehicle interior in the event of an accident. In the event of an accident, the restraint system can also reduce the forces to which the vehicle occupants are subjected.

A seat belt can only provide the best level of protection if it is worn correctly. Depending on the detected accident situation, Emergency Tensioning Devices and/or airbags supplement the protection offered by a correctly worn seat belt. Emergency Tensioning Devices and/or airbags are not deployed in every accident.

Vehicles with a front passenger bench seat: the Emergency Tensioning Device on the front passenger seat is triggered whether or not the seat belt tongue is engaged in the seat belt buckle.

If the vehicle does not have a driver's airbag, the seat belt system does not include an Emergency Tensioning Device or a seat belt force limiter.

In order for the restraint system to provide the intended level of protection, each vehicle occupant must observe the following information:

- Fasten seat belts correctly.
- Sit in an almost upright seat position with their back against the seat backrest.
- Sit with their feet resting on the floor, if possible.
- Always secure persons under 5 ft (1.50 m) tall in an additional restraint system suitable for this vehicle.

However, no system available today can completely eliminate injuries and fatalities in every accident situation. In particular, the seat belt and airbag generally do not protect against objects penetrating the vehicle from the outside. It is also not possible to completely rule out the risk of injury caused by the airbag deploying.

Limited protection from the restraint system

WARNING Risk of injury or death from modifications to the restraint system

The restraint system can no longer function correctly after alterations have been made.

The restraint system may then not protect the vehicle occupants as intended by failing in an accident or triggering unexpectedly, for example

- ▶ Never alter the parts of the restraint system.
- ▶ Never tamper with the wiring or any electronic component parts or their software.

If it is necessary to adjust the vehicle to accommodate a person with disabilities, contact an authorized Mercedes-Benz Center for details.

USA only: contact our Customer Assistance Center at 1-877-762-8267 for details.

Restraint system functionality

When the ignition is switched on, a self-test is performed, during which the restraint system warning lamp lights up. It goes out no later than a few seconds after the vehicle is started. The components of the restraint system are then functional.

Malfunctioning restraint system

A malfunction has occurred in the restraint system if:

- The restraint system warning lamp does not light up when the ignition is switched on
- The restraint system warning lamp lights up continuously or repeatedly during a journey

WARNING Risk of injury due to malfunctions in the restraint system

If the restraint system is malfunctioning, restraint system components may be triggered unintentionally or may not deploy as intended during an accident. This may affect the Emergency Tensioning Devices or airbags, for example.

▶ Have the restraint system checked and repaired immediately at a qualified specialist workshop.

Function of the restraint system in an accident

How the restraint system works is determined by the severity of the impact detected and the type of accident anticipated:

- Frontal impact
- Rear impact
- Side impact
- Rollover

The activation thresholds for the components of the restraint system are determined based on the evaluation of the sensor values measured at various points in the vehicle. This process is preemptive in nature. The triggering/deployment of the components of the restraint system must take place in good time at the start of the collision.

Factors which can only be seen and measured after a collision has occurred do not play a decisive role in the deployment of an airbag. Nor do they provide an indication of airbag deployment.

The vehicle may be deformed significantly without an airbag being deployed. This is the case if only parts which are relatively easily deformed are affected and the rate of vehicle deceleration is not high. Conversely, an airbag may be deployed even though the vehicle suffers only minor deformation. If very rigid vehicle parts such as longitudinal members are hit, for example, this may result in sufficiently high levels of vehicle deceleration.

The components of the restraint system can be activated or deployed independently of each other:

Component	Detected deployment situation
Emergency Tensioning Devices	Frontal impact, rear impact, side impact[1], rollover
Driver's airbag, front passenger front airbag	Frontal impact
Side airbag	Side impact
Window curtain airbag	Side impact, rollover, frontal impact

[1] Only if the vehicle is equipped with a side airbag or window curtain airbag.

⚠ **WARNING** Risk of burns from hot air bag components

The air bag parts are hot after an air bag has been deployed.

▶ Do not touch the air bag parts.

▶ Have a deployed air bag replaced at a qualified specialist workshop as soon as possible.

For your safety and that of your passengers, it is recommended that you have the vehicle towed to a qualified specialist workshop after an accident. Take this into account, particularly if an Emergency Tensioning Device is triggered or an airbag deployed.

If the Emergency Tensioning Devices are triggered or an airbag is deployed, you will hear a bang, and a small amount of powder may also be released:

- The bang will not generally affect your hearing.
- In general, the powder released is not hazardous to health but may cause short-term breathing difficulties to persons suffering from asthma or other pulmonary conditions.

  Provided it is safe to do so, leave the vehicle immediately or open the window in order to prevent breathing difficulties.

Airbags and pyrotechnic Emergency Tensioning Devices contain perchlorate material, which may require special handling or environmental protection measures. National guidelines regarding waste disposal must be observed. In California, see http://www.dtsc.ca.gov/HazardousWaste/Perchlorate/index.cfm.

Seat belts

Protection provided by the seat belt

Always fasten your seat belt correctly before starting a journey. A seat belt can only provide the best level of protection if it is worn correctly.

WARNING Risk of injury or death due to incorrectly fastened seat belt

If the seat belt is not worn correctly, it cannot perform its intended protective function.

In addition, an incorrectly fastened seat belt can also cause injuries, for example, in the event of an accident or when braking or changing direction suddenly.

▶ Always ensure that all vehicle occupants have their seat belts fastened correctly and are sitting properly.

Always observe the instructions about the correct driver's seat position and adjusting the seats (→ page 59).

In order for the correctly worn seat belt to provide the intended level of protection, each vehicle occupant must observe the following information:

- The seat belt must not be twisted and must fit tightly and snugly across the body.
- The seat belt must be routed across the center of the shoulder and as low down across the hips as possible.
- The shoulder section of the seat belt should not touch your neck nor be routed under your arm or behind your back.
- Avoid wearing bulky clothing, e.g. a winter coat.
- Push the lap belt down as far as possible across your hips and pull tight with the shoulder section of the belt. Never route the lap belt across your abdomen.

  Pregnant women must also take particular care with this.
- Never route the seat belt across sharp, pointed, abrasive or fragile objects.
- Only one person may use each seat belt at any one time. Infants and children must never travel sitting on the lap of a vehicle occupant.
- Never secure objects with a seat belt if the seat belt is being used by one of the vehicle's occupants. Always observe the instructions for loading the vehicle when securing objects, luggage or loads (→ page 72).

  Also ensure that no objects, e.g. a cushion, are ever placed between a person and the seat.

The seat belts on the following seats are equipped with a special seatbelt retractor:

- Co-driver seat
- Rear seats

Activate or deactivate the special seatbelt retractor of the seat belt (→ page 35).

If children are traveling in the vehicle, be sure to observe the instructions and safety notes on "Children in the vehicle" (→ page 34).

Limitations of the protection provided by the seat belt

WARNING Risk of injury or death due to incorrect seat position

The seat belt does not offer the intended level of protection if you have not moved the seat backrest to an almost vertical position.

When braking or in the event of an accident, you could slide underneath the seat belt and sustain abdominal or neck injuries, for example.

▶ Adjust the seat properly before beginning your journey.

▶ Always ensure that the seat backrest is in an almost vertical position and that the shoulder section of your seat belt is routed across the center of your shoulder.

WARNING Risk of injury or death when additional restraint systems are not used for persons with a smaller build

Persons under 5 ft (1.50 m) tall cannot wear the seat belt correctly without a suitable additional restraint system.

If the seat belt is not worn correctly, it cannot perform its intended protective function. In addition, an incorrectly fastened seat belt can also cause injuries, for example, in the event of an accident or when braking or changing direction suddenly.

▶ Always secure persons under 5 ft (1.50 m) tall in a suitable restraint system.

WARNING Risk of injury or death due to damaged or modified seat belts

Seat belts cannot provide protection in the following situations:

- The seat belt is damaged, has been modified, is extremely dirty, bleached or dyed
- The seat belt buckle is damaged or extremely dirty
- Modifications have been made to the Emergency Tensioning Device, seat belt anchorage or seat belt retractor

Seat belts may sustain non-visible damage in an accident, e.g. due to glass splinters.

Modified or damaged seat belts could tear or fail in the event of an accident, for example.

Modified Emergency Tensioning Devices may be deployed unintentionally or not function as intended.

▶ Never modify the seat belts, Emergency Tensioning Devices, seat belt anchorages or seat belt retractors.

▶ Make sure that the seat belts are not damaged, are not worn and are clean.

▶ Always have the seat belts checked immediately after an accident at a qualified specialist workshop.

Only use seat belts that have been approved for your vehicle by the sales organization named on the inside front cover.

WARNING Risk of injury or death from deployed pyrotechnic Emergency Tensioning Devices

Pyrotechnic Emergency Tensioning Devices that have been deployed are no longer operational and are unable to perform their intended protective function.

▶ Therefore, have deployed pyrotechnic Emergency Tensioning Devices immediately replaced at a qualified specialist workshop.

For your safety and that of your passengers, it is recommended that you have the vehicle towed to a qualified specialist workshop after an accident.

NOTE Damage caused by trapping the seat belt

If an unused seat belt is not fully retracted, it may become trapped in the door or in the seat mechanism.

▶ Always ensure that an unused seat belt is fully retracted.

Fastening and adjusting the seat belts

If the seat belt is pulled quickly or sharply, the seat belt retractor locks. The seat belt strap cannot be pulled out any further.

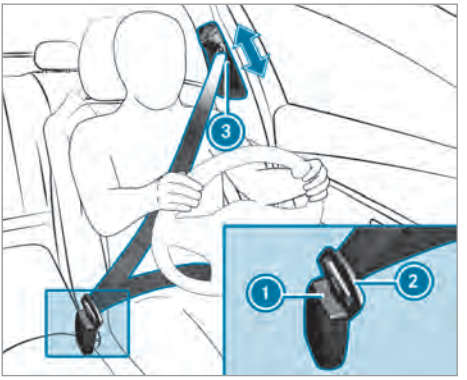

▶ Always engage seat belt tongue ② of the seat belt into seat belt buckle ① of the corresponding seat.

▶ Press and hold the seat belt outlet release and slide seat belt outlet ③ into the desired position.

▶ Let go of the seat belt outlet release and ensure that seat belt outlet ③ locks into position.

Vehicles with single front passenger seat:

NOTE Deployment of the Emergency Tensioning Device when the front-passenger seat is unoccupied

If the seat belt tongue is engaged in the seat belt buckle of the unoccupied front-passenger seat, the Emergency Tensioning Device may also deploy in the event of an accident along with other systems.

▶ Only one person should use each seat belt at any one time.

Releasing seat belts

▶ Press the release button in the seat belt buckle and guide the seat belt back with the seat belt tongue.

Function of the seat belt warning system for driver and co-driver

The [ ] seat belt warning lamp in the Instrument Display reminds you that all vehicle occupants must fasten their seat belts correctly.

The [ ] seat belt warning lamp lights up for six seconds every time after switching on the ignition.

A warning tone may also sound.

After the engine is started, the seat belt warning goes out as soon as the driver's and the front-passenger seat belts are fastened.

While driving the seat belt warning lights up in the following cases:

- if the vehicle's speed is higher than 15 mph (25 km/h) and the driver's or front-passenger seat belt is not fastened
- if the driver or co-driver unfasten their seat belt during the journey

Airbags

Overview of airbags

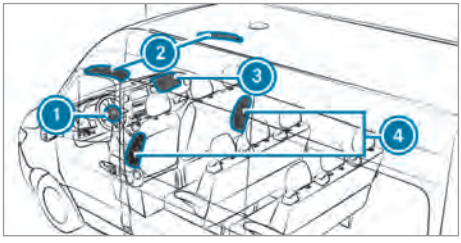

① Driver's airbag
② Window curtain airbag
③ front-passenger front airbag
④ Side airbag

An airbag's installation location is identified by the label AIRBAG.

When activated, an airbag can increase protection for the respective vehicle occupant.

Potential protection of each airbag:

Airbag	Potential protection for ...
Driver's airbag, front-passenger front airbag:	Head and chest
Window curtain airbag	Head
Side airbag	Chest and pelvis

Protection by the airbags

Depending on the accident situation, an airbag may supplement the protection offered by a correctly fastened seat belt.

⚠ **WARNING** Risk of injury or death due to incorrect seat position

If you deviate from the correct seat position, the airbag cannot perform its intended protective function and deployment may even cause further injuries.

In order to avoid risks, each vehicle occupant must always make sure of the following:

- Fasten seat belts correctly. Pregnant women must take particular care to ensure that the lap belt never lies across the abdomen.
- Adopt the correct seat position and keep as far away as possible from the airbags.
- Observe the following information.

▶ Always make sure that there are no objects between the airbag and vehicle occupant.

To avoid the risks resulting from the deployment of an airbag, each vehicle occupant must observe the following information in particular:

- Before starting your journey, adjust your seat correctly; the driver's seat and front passenger seat should be moved as far back as possible.

  When doing so, always observe the information on the correct driver's seat position (→ page 59).
- Only hold the steering wheel by the steering wheel rim. This allows the airbag to be fully deployed.

- Always lean against the seat backrest when the vehicle is in motion. Do not lean forwards or against the door or side window. You may otherwise be in the deployment area of the airbags.
- Always keep your feet on the floor. Do not put your feet on the cockpit, for example. Your feet may otherwise be in the deployment area of the airbag.
- If children are traveling in the vehicle, observe the additional notes (→ page 34).
- Always stow and secure objects correctly.

Objects in the vehicle interior may prevent an airbag from functioning correctly. Each vehicle occupant must always make sure of the following in particular:

- There are no people, animals or objects between the vehicle occupants and an airbag.
- There are no objects between the seat, door and door pillar (B-pillar).
- There are no hard objects, e.g. coat hangers, hanging on the grab handles or coat hooks.
- There are no accessory parts, such as mobile navigation devices, mobile phones or cup holders, attached to the vehicle within the deployment area of an airbag, e.g. on the cockpit, on the door, on the side window or on the side wall trim.

  In addition, no connecting cables, tensioning straps or retaining straps must be routed or attached to the vehicle within the deployment area of an airbag. Always comply with the accessory manufacturer's installation instructions and, in particular, the notes on suitable places for installation.
- There are no heavy, sharp-edged or fragile objects in the pockets of your clothing. Store such objects in a suitable place.

Limited protection from airbags

WARNING Risk of injury due to modifications to the airbag cover

If you modify the cover of an airbag or affix objects such as stickers to it, the airbag may no longer function correctly.

▶ Never modify the cover of an airbag and do not affix objects to it.

The installation location of an airbag is identified by the AIRBAG symbol (→ page 32).

WARNING Risk of injury or death due to the use of unsuitable seat covers

Unsuitable seat covers can obstruct or prevent the deployment of the airbags integrated into the seats.

Consequently, the airbags cannot protect vehicle occupants as they are designed to do.

▶ Only use seat covers that have been approved for your vehicle by the sales organization named on the inside front cover.

WARNING Risk of injury due to malfunctions of the sensors in the door paneling

Sensors to control the airbags are located in the doors. Modifications or work not performed correctly to the doors or door paneling, as well as damaged doors, can lead to the function of the sensors being impaired. The airbags might therefore not function properly any more.

Consequently, the airbags cannot protect vehicle occupants as they are designed to do.

▶ Never modify the doors or parts of the doors.

▶ Always have work on the doors or door paneling carried out at a qualified specialist workshop.

WARNING Risk of injury due to deployed airbag

A deployed airbag no longer has a protective function and cannot protect as intended in the event of an accident.

▶ Have the vehicle towed to a qualified specialist workshop in order to have the deployed airbag replaced.

Have deployed airbags replaced immediately.

Children in the vehicle

Notes on the safe transportation of children

⚠ **WARNING** Risk of accident and injury due to children left unattended in the vehicle

If children are left unattended in the vehicle, they could:

- Open doors, thereby endangering other persons or road users.
- Get out and be struck by oncoming traffic.
- Operate vehicle equipment and become trapped, for example.

In addition, the children could also set the vehicle in motion, for example by:

- Releasing the parking brake.
- Changing the transmission position.
- Starting the vehicle.

▶ Never leave children unattended in the vehicle.

▶ When leaving the vehicle, always take the key with you and lock the vehicle.

▶ Keep the vehicle key out of reach of children.

⚠ **WARNING** Risk of fatal injury due to exposure to extreme heat or cold in the vehicle

If people – particularly children – are exposed to extreme temperatures over an extended period of time, there is a risk of serious or even fatal injury.

▶ Never leave anyone – particularly children – unattended in the vehicle.

▶ Never leave animals in the vehicle unattended.

⚠ **WARNING** Risk of burns when the child seat is exposed to direct sunlight

If the child restraint system is exposed to direct sunlight or heat, parts could heat up.

Children could suffer burns from these parts, particularly on metallic parts of the child restraint system.

▶ Always make sure that the child restraint system is not exposed to direct sunlight.

▶ Protect it with a blanket, for example.

▶ If the child restraint system has been exposed to direct sunlight, allow it to cool before securing a child into it.

▶ Never leave children unattended in the vehicle.

The use of seat belts and child restraint systems is required by law:

- in all 50 states
- in U.S. territories
- in the District of Columbia
- in all Canadian provinces

All child restraint systems must meet the following standards:

- U.S. Federal Motor Vehicle Safety Standards 213 and 225
- Canadian Motor Vehicle Safety Standards 213 and 210.2

You can obtain further information about the correct child restraint system from an authorized Mercedes-Benz Center.

To improve protection for children younger than 12 years old or under 5 ft (1.50 m) in height, Mercedes-Benz recommends you always observe the following notes:

- Only secure children in a child restraint system which is suitable and recommended for Mercedes-Benz vehicles and which is appropriate for the age, weight and size of the child. Observe the instructions for correct use of the child restraint system.
- If possible, install the child restraint system on a rear seat.
- Only use the following securing systems for child restraint systems:
  - the seat belt system
  - the LATCH-type (ISOFIX) securing rings
  - the Top Tether anchorages
- Observe the child restraint system manufacturer's installation instructions.
- Observe the warning labels in the vehicle interior and on the child restraint system.

⚠ **WARNING** Risk of injury or death caused by incorrect installation of the child restraint system

If the child restraint system is incorrectly installed on a suitable seating position, it cannot perform its intended protective function.

The child cannot be restrained in the event of an accident, heavy braking or a sudden change of direction.

- ▶ Always comply with the manufacturer's installation instructions for the child restraint system and its correct use.
- ▶ Make sure that the entire base of the child restraint system always rests on the sitting surface of the seat.
- ▶ Never place objects under or behind the child restraint system, e.g. cushions.
- ▶ Always use child restraint systems with the original cover designed for them.
- ▶ Always replace damaged covers with genuine covers.

⚠ **WARNING** Risk of injury or death from unsecured child restraint systems in the vehicle

If the child restraint system is not correctly installed or secured, it could release in the event of an accident, sudden braking or a sudden change in direction.

The child restraint system could be flung around and hit vehicle occupants.

- ▶ Always install child restraint systems correctly, even when not in use.
- ▶ Always comply with the child restraint system manufacturer's installation instructions.

⚠ **WARNING** Risk of injury or death caused by the use of damaged child restraint systems

Child restraint systems or their retaining systems that have been subjected to a load in an accident may then not be able to perform their intended protective function.

The child cannot be restrained in the event of an accident, heavy braking or a sudden change of direction.

- ▶ Always replace child restraint systems immediately that have been damaged or involved in an accident.
- ▶ Have the securing systems for the child restraint systems checked at a qualified specialist workshop before installing a child restraint system again.

A booster seat may be necessary to achieve proper seat belt positioning for children over 40 lbs (18 kg) until they reach a height where a three-point seat belt fits properly without a booster seat.

The following notes must be observed:

- When installing a child restraint system on the co-driver seat, observe the information on child restraint systems on the co-driver seat (⟶ page 38).
- Safety notes on the seat belt (⟶ page 30).
- Information on the correct use of the seat belt (⟶ page 31).

Activating/deactivating the seat belt's child special seat belt retractor

⚠ **WARNING** Risk of injury or death if a seat belt is unfastened while the vehicle is in motion

If the seat belt is released while the vehicle is in motion, the child restraint system is no longer correctly secured. The child seat safety feature is deactivated and the seat belt is drawn in a bit by the inertia reel.

It is therefore not possible to engage the seat belt again.

- ▶ Pull over and stop the vehicle safely as soon as possible, paying attention to road and traffic conditions.
- ▶ Activate the child seat safety feature again and correctly secure the child restraint system.

When enabled, the special seat belt retractor ensures that the seat belts of the front passenger seat and rear seats do not slacken once the child restraint system is secured.

The seat belts on the following seats are equipped with a special seat belt retractor:

- Front passenger seat
- Rear seats

- **To install a child restraint system:** when installing a child restraint system, always observe the manufacturer's installation and operating instructions as well as the information in this Operator's Manual.
- Pull the seat belt smoothly from the seat belt outlet.
- Engage the seat belt tongue in the seat belt buckle.
- **To activate the special seat belt retractor:** pull the seat belt out fully and let the inertia reel retract it again.
  When the special seat belt retractor is activated, you should hear a ratcheting sound.
- Push the child restraint system down until the seat belt sits tightly.
- **To deactivate the special seat belt retractor:** press the release button of the seat belt buckle.
- Hold the seat belt tongue and guide back to the seat belt outlet.

Installing the LATCH-type (ISOFIX) child restraint system on the rear seat

Notes on LATCH-type (ISOFIX) child seat securing systems

⚠ **WARNING** Risk of injury or death if the permissible gross mass of the child and child restraint system is exceeded

For LATCH-type (ISOFIX) child restraint systems in which the child is secured using the integrated seat belt in the child restraint system, the permissible gross mass of the child and child restraint system is 73 lb (33 kg).

If the child and the child restraint system together weigh more than 73 lb (33 kg), the LATCH-type (ISOFIX) child restraint system with integrated seat belt does not offer sufficient protection. An excessive load may be placed on the LATCH-type (ISOFIX) child seat attachments and the child may not be restrained in the event of an accident, for example.

- If the child and the child restraint system together weigh more than 73 lb (33 kg), use only a LATCH-type (ISOFIX) child restraint system that secures the child with the vehicle seat belt.
- Also secure the child restraint system with the Top Tether belt, if available.

Always comply with the information about the mass of the child restraint system:

- In the manufacturer's installation and operating instructions for the child restraint system used
- On a label on the child restraint system, if available

Check regularly that the permissible gross mass of the child plus the child restraint system is not exceeded.

When installing a child restraint system, be sure to observe the manufacturer's installation and operating instructions and the correct use of the child restraint system as well as consider the suitability of the seats.
ISOFIX is a standardized securing system for special restraint systems. LATCH-type (ISOFIX) child restraint systems are approved in accordance with UN-R44.

Only child restraint systems that have been approved in accordance with UN-R44 may be attached to LATCH-type (ISOFIX) mounting brackets.

Symbol for installing a LATCH-type (ISOFIX) child restraint system

Installing LATCH-type (ISOFIX) child seat securing systems

⚠ **WARNING** Risk of injury or death if the permissible gross mass of the child and child restraint system is exceeded

For LATCH-type (ISOFIX) child restraint systems in which the child is secured using the integrated seat belt in the child restraint sys-

tem, the permissible gross mass of the child and child restraint system is 73 lb (33 kg).

If the child and the child restraint system together weigh more than 73 lb (33 kg), the LATCH-type (ISOFIX) child restraint system with integrated seat belt does not offer sufficient protection. An excessive load may be placed on the LATCH-type (ISOFIX) child seat attachments and the child may not be restrained in the event of an accident, for example.

▶ If the child and the child restraint system together weigh more than 73 lb (33 kg), use only a LATCH-type (ISOFIX) child restraint system that secures the child with the vehicle seat belt.

▶ Also secure the child restraint system with the Top Tether belt, if available.

Always comply with the information about the mass of the child restraint system:

- In the manufacturer's installation and operating instructions for the child restraint system used
- On a label on the child restraint system, if available

Check regularly that the permissible gross mass of the child plus the child restraint system is not exceeded.

When installing a child restraint system, be sure to observe the manufacturer's installation and operating instructions and the correct use of the child restraint system as well as consider the suitability of the seats.

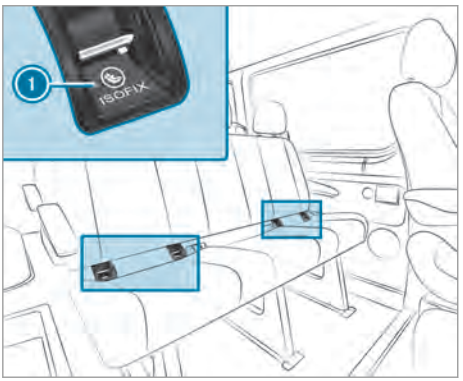

1 LATCH-type (ISOFIX) mounting brackets

Before every trip, make sure that the LATCH-type (ISOFIX) child restraint system is engaged correctly in both LATCH-type (ISOFIX) mounting brackets in the vehicle.

NOTE Be careful not to damage the seat belt for the center seat when installing the child restraint system

▶ Make sure that the seat belt is not trapped.

▶ Install the LATCH-type (ISOFIX) child restraint system on both of the vehicle's mounting brackets.

Securing Top Tether

WARNING Risk of injury due to incorrect attachment of the Top Tether belt

If you attach the Top Tether belt incorrectly, e.g. on an eyelet in the cargo compartment, the child restraint system will not have been secured correctly.

In an accident, it will therefore be unable to provide the intended level of protection.

▶ Only ever attach the Top Tether hook to the designated Top Tether anchorage.

The risk of injury can be reduced by Top Tether. The Top Tether belt facilitates an additional connection between the child restraint system attached with LATCH-type (ISOFIX) and the vehicle.

The risk of injury can be reduced by Top Tether. The Top Tether belt facilitates an additional connection between the child restraint system attached with LATCH-type (ISOFIX) and the vehicle.

The child restraint system must be equipped with a Top Tether belt.

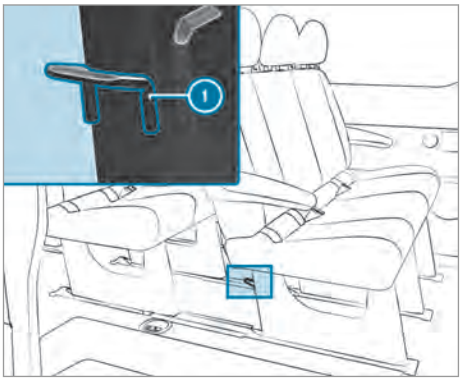

Top Tether anchorages ① are located on the back of the rear bench seat on the bench seat legs.

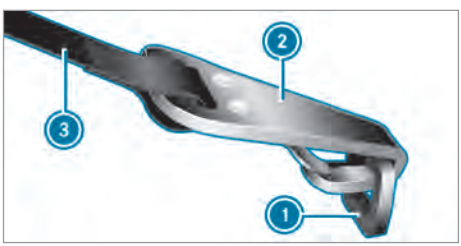

- ▶ If necessary, move the head restraint upwards (→ page 70).
- ▶ Install the LATCH-type (ISOFIX) child restraint system with Top Tether. Comply with the child restraint system manufacturer's installation instructions when doing so.
- ▶ Route Top Tether belt ③ under the head restraint between the two head restraint bars.
- ▶ Hook Top Tether hook ② into Top Tether anchorage ① without twisting.
- ▶ Tension Top Tether belt ③. Comply with the child restraint system manufacturer's installation instructions when doing so.
- ▶ If necessary, slide the head restraint downwards (→ page 70). Make sure that you do not interfere with the correct routing of Top Tether belt ③.

Child restraint systems on the front-passenger seat

Notes on a child restraint system on the co-driver's seat

Accident statistics show that children secured on the rear seats are safer than children secured on the front seats. For this reason, Mercedes-Benz strongly advises that you install a child restraint system on a rear seat.

Notes on rearward-facing child restraint systems

The front-passenger front airbag cannot be deactivated. Always install a rearward-facing child restraint system on a suitable rear seat, but never on the front-passenger seat. Observe the manufacturer's installation and operating instructions for the child restraint system used.

Notes on forward-facing child restraint systems on the front-passenger seat

When using the child restraint system on the front-passenger seat, you must observe the following points:

- Set the front-passenger seat to its rearmost position. If on a seat with seat height adjustment, also set the seat to its highest position.
- Set the seat backrest to an almost vertical position.
- Retract the seat cushion length completely.
- The base of the child restraint system must lie fully on the front-passenger seat cushion.
- The backrest of a forward-facing child restraint system must, as far as possible, lie flat against the backrest of the front-passenger seat. The child restraint system must not touch the roof or be put under strain by the head restraints.
- If necessary, adjust the angle of the seat backrest and the position of the head restraints accordingly.
- Set the seat cushion angle in such a way that the front edge of the seat cushion is in the highest position and the rear edge of the seat cushion is in the lowest position.
- Always make sure that the shoulder belt strap is correctly routed from the seat belt outlet of the vehicle to the shoulder belt guide on the child restraint system. The shoulder belt strap must be routed forwards and downwards from the seat belt outlet.

- If necessary, adjust the seat belt outlet and the front-passenger seat as appropriate.
- Never place objects under or behind the child restraint system, e.g. cushions.

Always observe the manufacturer's installation and operating instructions for the child restraint system being used.

Activating/deactivating child safety locks for the doors

⚠ **WARNING** Risk of accident and injury due to children left unattended in the vehicle

If children are left unattended in the vehicle, they could:

- Open doors, thereby endangering other persons or road users.
- Get out and be struck by oncoming traffic.
- Operate vehicle equipment and become trapped, for example.

In addition, the children could also set the vehicle in motion, for example by:

- Releasing the parking brake.
- Changing the transmission position.
- Starting the vehicle.

▶ Never leave children unattended in the vehicle.

▶ When leaving the vehicle, always take the key with you and lock the vehicle.

▶ Keep the vehicle key out of reach of children.

⚠ **WARNING** Risk of fatal injury due to exposure to extreme heat or cold in the vehicle

If people – particularly children – are exposed to extreme temperatures over an extended period of time, there is a risk of serious or even fatal injury.

▶ Never leave anyone – particularly children – unattended in the vehicle.

▶ Never leave animals in the vehicle unattended.

⚠ **WARNING** Risk of accident and injury due to children left unattended in the vehicle

When children are traveling in the vehicle, they could:

- open doors, thereby endangering other people or road users
- get out of the vehicle and be hit by traffic
- operate vehicle equipment and become trapped, for example

▶ When children are traveling in the vehicle, always activate the available child safety locks.

▶ Never leave children unattended in the vehicle.

▶ When leaving the vehicle, always take the key with you and lock the vehicle.

The following doors have child safety locks:

- Sliding doors

The child safety locks on the doors secure each door separately. The doors can no longer be opened from the inside (exception: electric sliding door). When the vehicle is unlocked, the door can be opened from the outside.

If the electric sliding door is secured, only the sliding door controls in the rear are deactivated. The electric sliding door can be opened at any time using the switch in the center console (→ page 47).

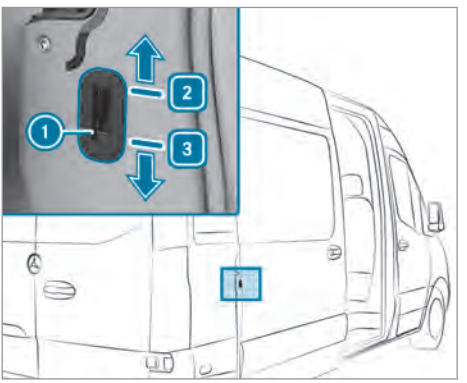

Example: sliding door child safety lock

▶ Slide child safety bolt ① to position [2] (activate) or [3] (deactivate).

▶ Make sure that the child safety locks are working properly.

Notes on pets in the vehicle

⚠ **WARNING** Risk of accident and injury due to animals left unsecured or unattended in the vehicle

If you leave animals in the vehicle unattended or unsecured, they could possibly press down buttons or switches.

Thereby an animal may:

- activate vehicle equipment and become trapped, for example
- switch systems on or off and endanger other road users

Unsecured animals may be thrown around in the vehicle in the event of an accident or sudden steering and braking maneuver and injure vehicle occupants in the process.

▶ Never leave animals in the vehicle unattended.

▶ Always correctly secure animals while driving, for example using a suitable animal carrier.

SmartKey

Notes on radio connections of the key

⚠ **DANGER** Risk of fatal injury to persons with medical devices from the electromagnetic radiation of the start/stop button

Persons with medical devices, e.g. pacemakers or defibrillators:

When you operate the start/stop button, a radio connection is established between the key and the vehicle.

The electromagnetic radiation can affect the functionality of a medical device.

▶ Before operating the vehicle, consult your doctor or the manufacturer of the medical device about any possible effects of emissions from such systems.

Detection range of the KEYLESS-START function antenna

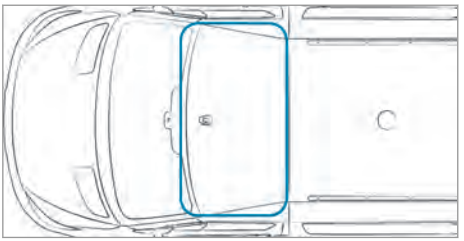

Overview of SmartKey functions

⚠ **WARNING** Risk of accident and injury due to children left unattended in the vehicle

If children are left unattended in the vehicle, they could:

- open doors, thereby endangering other persons or road users.
- get out of the vehicle and be hit by oncoming traffic.
- operate vehicle equipment and become trapped, for example.

In addition, children could also set the vehicle in motion, for example, by:

- releasing the parking brake.
- shifting the automatic transmission out of park position P.
- starting the engine

▶ Never leave children and animals unattended in the vehicle.

▶ When leaving the vehicle, always take the SmartKey with you and lock the vehicle.

▶ Keep the SmartKey out of the reach of children.

! **NOTE** Damage to the key caused by magnetic fields

▶ Keep the key away from strong magnetic fields.

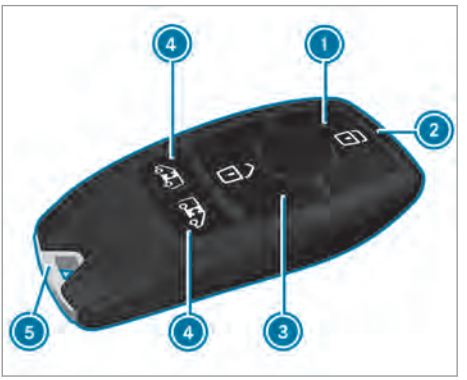

1. To lock
2. Battery check lamp
3. To unlock
4. To unlock the cargo compartment (sliding doors and rear-end doors)/to unlock and open/close electric sliding doors
5. Mechanical key

The SmartKey's factory setting enables you to centrally lock and unlock the following components:

- The driver's door and the co-driver door
- The sliding doors
- The rear-end doors

ⓘ If you do not open the vehicle within approximately 40 seconds of unlocking, the vehicle will lock again and anti-theft protection will be activated again.

Do not keep the SmartKey together with electronic devices or metallic objects. This can affect the SmartKey's functionality.

ⓘ If the battery check lamp does not light up when you press the [🔓] or [🔒] button, the battery is discharged.

Replace the SmartKey battery (→ page 42).

Changing the unlocking settings

The key has the following adjustable unlocking functions:

- unlock centrally
- unlock driver's and front-passenger door (Cargo Van)
- unlock driver's door (Passenger Van, chassis version)

▶ **To switch between the settings:** press and hold the [🔓] and [🔒] buttons at the same time for approximately six seconds until the battery check lamp flashes twice.

When the locking function is selected for the driver's door or the driver's and front-passenger door:

- pressing the [🔓] button a second time unlocks the vehicle centrally

Reducing the energy consumption of the SmartKey

If you do not use the vehicle or a SmartKey for an extended period, you may deactivate the KEYLESS START function of the SmartKey.

▶ **To deactivate:** press the [🔒] button on the SmartKey twice in quick succession.
The battery check lamp on the SmartKey lights up twice quickly and once for longer.

▶ **To activate:** press any button on the SmartKey.

When starting the vehicle with the SmartKey in the slot in the shift console, the SmartKey functions are activated automatically.

Removing and inserting the mechanical key

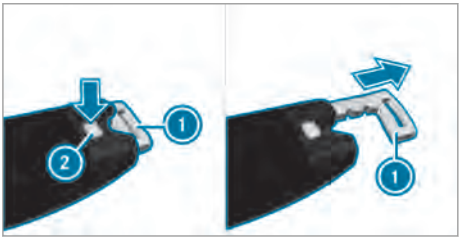

▶ **To remove:** press release button ②.
Mechanical key ① is pushed slightly out.

▶ Pull mechanical key ① out completely.

▶ **To insert:** press release button ②.

▶ Slide mechanical key ① in completely until it engages.

Replacing the key battery

⚠ **DANGER** Serious damage to health caused by swallowing batteries

Batteries contain toxic and corrosive substances. Swallowing batteries may cause serious damage to health.

There is a risk of fatal injury.

▶ Keep batteries out of the reach of children.

▶ If batteries are swallowed, seek medical attention immediately.

ENVIRONMENTAL NOTE Environmental damage caused by improper disposal of batteries

Batteries contain pollutants. It is illegal to dispose of them with the household rubbish.

▶ Dispose of batteries in an environmentally responsible manner. Take discharged batteries to a qualified specialist workshop or to a collection point for used batteries.

Requirements:
- A CR 2032 3 V cell battery

Mercedes-Benz recommends that you have the battery replaced by a qualified specialist workshop.

▶ Remove the emergency key (→ page 42).

Example image

▶ Press release button ② down fully and slide cover ① forward.

▶ Remove battery compartment ③ and remove the discharged battery.

▶ Insert the new battery into battery compartment ③. Observe the positive pole marking in the battery compartment and on the battery.

▶ Insert battery compartment ③.

▶ Replace cover ① so that it engages.

▶ Slide the emergency key in completely until it engages (→ page 42).

Problems with the key

Problem	Possible causes/consequences and ▶ Solutions
You cannot lock or unlock the vehicle any more.	Possible causes: • the key battery is weak or discharged • there is interference from a powerful source of radio waves • the key is defective ▶ Check the battery using the battery check lamp and replace if necessary (→ page 42). ▶ Use the emergency key to unlock and lock the vehicle (→ page 42). ▶ Have the key checked at a qualified specialist workshop.
You have lost a key.	▶ Have the key deactivated at a qualified specialist workshop. ▶ If necessary, have the mechanical locks replaced.

Doors

Unlocking and opening the door from inside

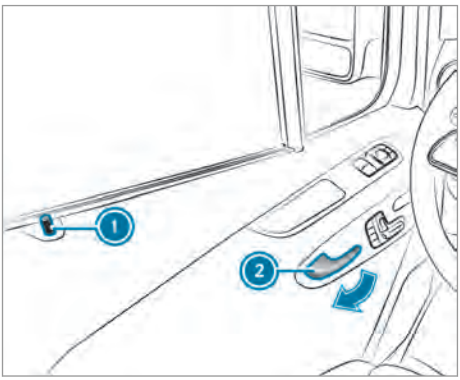

▶ **To unlock and open the front door:** pull door handle ②.
Locking pin ① pops up when the door is unlocked.

▶ Open the door.

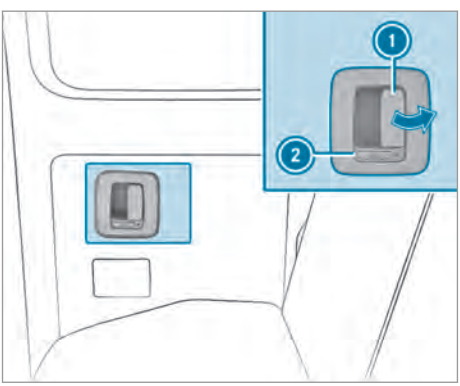

The [🔓] symbol indicates that the rear door is unlocked.

▶ **To unlock and open the rear door:** pull opening lever ① and open the rear door. When the door unlocks, latch ② moves forward.

The [🔓] symbol is visible.

▶ **To close:** pull the rear passenger compartment door closed by the door handle.

▶ **To lock:** slide latch ② down.
The [🔒] symbol is visible.

Locking the door centrally from inside

⚠ **WARNING** Risk of accident and injury due to children left unattended in the vehicle

If children are left unattended in the vehicle, they could:

- open doors, thereby endangering other persons or road users.
- get out of the vehicle and be hit by oncoming traffic.
- operate vehicle equipment and become trapped, for example.

In addition, children could also set the vehicle in motion, for example, by:

- releasing the parking brake.
- shifting the automatic transmission out of park position [P].
- starting the engine

▶ Never leave children and animals unattended in the vehicle.

▶ When leaving the vehicle, always take the SmartKey with you and lock the vehicle.

▶ Keep the SmartKey out of the reach of children.

⚠ **WARNING** Risk of fatal injury due to exposure to extreme heat or cold in the vehicle

If people – particularly children – are exposed to extreme temperatures over an extended period of time, there is a risk of serious or even fatal injury.

▶ Never leave anyone – particularly children – unattended in the vehicle.

▶ Never leave animals in the vehicle unattended.

Locking and unlocking manually

You can use the central locking buttons to centrally lock and unlock the entire vehicle from the inside.

The central locking buttons are located in the driver's and co-driver doors.

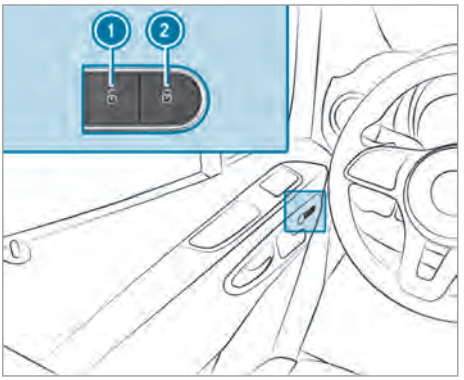

Example: central locking buttons in the driver's door

▶ **To lock/unlock the entire vehicle:** press button ① (unlock) or ② (lock) when the doors are closed.

Switching the automatic locking feature on or off

When the ignition is switched on and the vehicle is driving at a speed above 9 mph (15 km/h), the vehicle locks automatically.

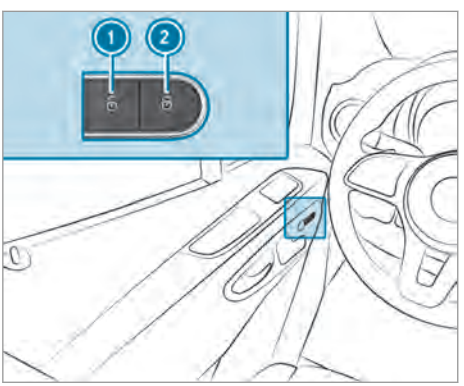

Example: central locking buttons in the driver's door

There is a danger of being locked out when the function is activated in the following situations:

- when tow-starting or pushing the vehicle
- on the roller dynamometer

▶ When the doors are closed, switch on the power supply or ignition.

▶ **To switch on:** press and hold button ② for approximately five seconds.
An acoustic signal sounds.

▶ **To switch off:** press and hold button ① for approximately five seconds.
An acoustic signal sounds.

Unlocking/locking the driver's door with the emergency key

ⓘ If you want to lock the vehicle completely with the emergency key, press the button for the locking mechanism from inside first with the driver's door open. Then lock the driver's door with the emergency key.

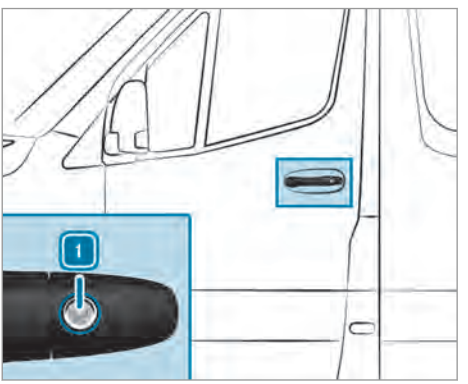

▶ **To unlock:** turn the emergency key counter-clockwise to position 1.

▶ **To lock:** turn the emergency key clockwise to position 1.

ⓘ **Right-hand drive vehicles:** turn the emergency key in the opposite direction in each case.

Sliding door

Opening/closing the sliding door from outside

⚠ **WARNING** Risk of entrapment by open sliding door which is not engaged

If the open sliding door is not engaged, it could move on its own if the vehicle is on a slope.

This could trap you or other persons.

▶ Always make sure that the open sliding door is engaged. Open the sliding door as far as it will go.

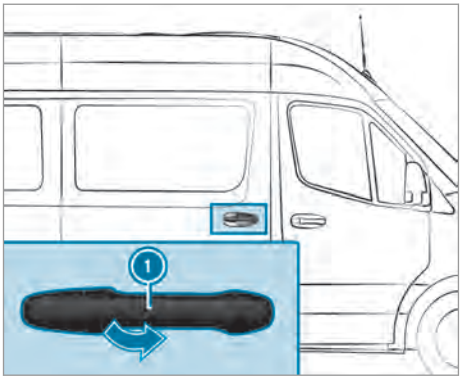

ⓘ Your vehicle may be equipped with a long sliding door with an intermediate detent. You can also lock the sliding door in place around halfway when opening and closing. If you do this, the door does not have to be opened fully when getting into or out of the vehicle. The sliding door is not fully engaged when in the intermediate detent.

▶ **To open:** pull door handle ①.
The sliding door opens.

▶ Push back the sliding door using door handle ① until it engages.

▶ Check the sliding door detent.

▶ **To close:** pull the sliding door by handle ① and firmly slide it forwards until it closes.

Opening/closing the sliding door from inside

⚠ **WARNING** Risk of entrapment by open sliding door which is not engaged

When you open the sliding door, the sliding door could hit other people as it moves backwards.

▶ Only open the sliding door when traffic conditions permit.

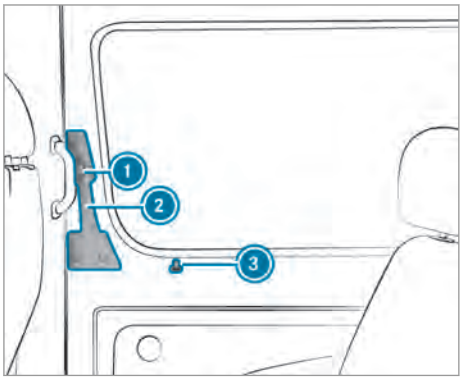

ⓘ Your vehicle may be equipped with a long sliding door with an intermediate detent. You can also lock the sliding door in place around halfway when opening and closing. If you do this, the door does not have to be opened fully when getting into or out of the vehicle. The sliding door is not fully engaged when in the intermediate detent.

▶ **To unlock:** pull locking pin ③ upwards manually or use the central locking button to unlock the sliding door (→ page 44).

▶ **To open:** press button ①.

▶ Slide the sliding door by handle ② back to the stop.

▶ Check the sliding door detent. The sliding door must be engaged.

▶ **To close:** press button ①.

▶ Slide the sliding door firmly forwards by handle ② until it closes.

▶ **To lock:** push locking pin ③ downwards manually or use the central locking button to lock the sliding door (→ page 44).

Notes on electrical closing assist

If your vehicle is equipped with electrical closing assist, you will require less force to close the sliding door.

Electrical sliding door

Function of the electric sliding door

Your vehicle can be equipped with an electric sliding door on the left and/or right-hand side.

You can operate the electric sliding door in the following ways:

- by pressing the sliding door buttons on the center console
- by pressing the sliding door button on the door sill (B-pillar)
- using the door handle (inside or outside)
- using the key

If the electric sliding door is obstructed while opening, it moves a few centimeters in the opposite direction and stops.

If the sliding door is obstructed during the closing procedure, it opens fully again.

If the electric motor of the sliding door is in danger of overheating, e.g. due to frequent opening and closing within a short period, the sliding door opens fully. The sliding door is then locked in place. The sliding door is operational again after approximately 30 seconds.

If there has been a malfunction or if the battery has been disconnected, you can use the release catch to disconnect the sliding door from the electric motor. Then you can open or close the door manually (→ page 48).

Opening/closing the electric sliding door with the button

WARNING Risk of entrapment by open sliding door which is not engaged

When you open the sliding door, the sliding door could hit other people as it moves backwards.

▶ Only open the sliding door when traffic conditions permit.

WARNING Risk of injury despite obstacle detection

Obstacle detection does not react to soft, light and thin objects, such as fingers. These or other parts of the body could be pressed against the door frame, for instance. Obstacle detection cannot prevent entrapment in these instances.

▶ When opening and closing the electric sliding door, make sure that nobody is within the operating range of the sliding door.

▶ If someone becomes trapped, press the button again to stop the sliding door.

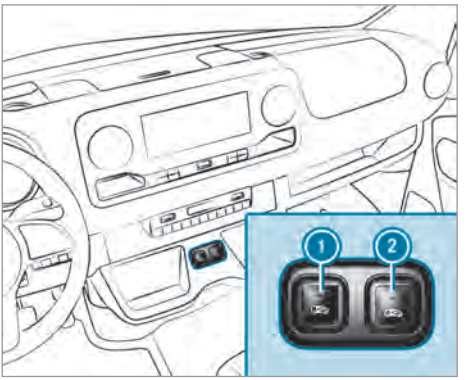

Sliding door buttons on the center console

1 Opens and closes the sliding door on the left side of the vehicle

2 Opens and closes the sliding door on the right side of the vehicle

Sliding door button on the door sill (B-pillar)

On vehicles with a partition, button 3 is located on the partition next to the doorway at the level of the inside door handle.

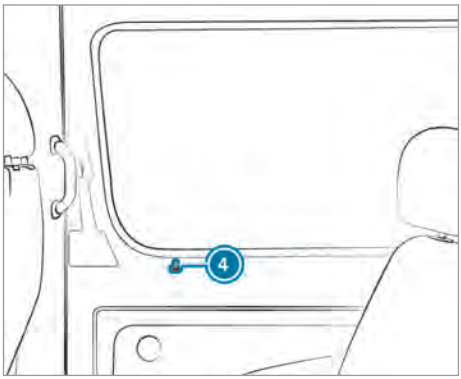

When the sliding door is locked, it can only be opened from the inside by manually unlocking locking pin ④.

- **To unlock:** pull locking pin ④ upwards manually or use the central locking button to unlock the sliding door (→ page 44).
- **To open:** briefly press button ①, ② or button ③.
  The sliding door opens automatically.

  When you open the door using button ① or ②, you will additionally hear two warning signals.

  The indicator lamp at the top of button ① or ② will flash and button ③ will flash.

  When the sliding door is completely open, the indicator lamp at the top of button ① or ② will light up.
- **To close:** briefly press button ①, ② or button ③.
  The sliding door closes automatically.

  When you close the door using button ① or ②, you will additionally hear two warning signals.

  The indicator lamp at the top of button ① or ② will flash and button ③ will flash.

  When the sliding door is completely closed, the indicator lamp at the top of button ① or ② will go out.
- **To stop automatic operation:** briefly press button ① or ②.
  The sliding door stops moving.
- **To lock:** push locking pin ③ downwards manually or use the central locking button to lock the sliding door (→ page 44).

ⓘ When you stop automatic operation upon opening the door, the door closes when you press the button again.

ⓘ In unfavorable operating conditions, e.g. frost, ice or heavy soiling, you can press and hold the corresponding button. The electric sliding door moves with increased force. Observe that, in such circumstances, the obstacle detection is less sensitive. To stop the movement, release the button.

Opening/closing the electric sliding door with the key

- **To unlock:** briefly press the or button on the key.
- **To open:** press and hold the or button on the key for longer than 0.5 seconds.
  You will hear two acoustic signals and the sliding door will open automatically.
- **To close:** press and hold the or button on the key for longer than 0.5 seconds.
  You will hear two acoustic signals and the sliding door will close automatically.
- **To interrupt automatic operation:** briefly press the or button on the key.
  The sliding door stops moving.

ⓘ When you stop automatic operation upon opening the door, the door closes when you press the button again.

Opening/closing the electric sliding door with the door handle

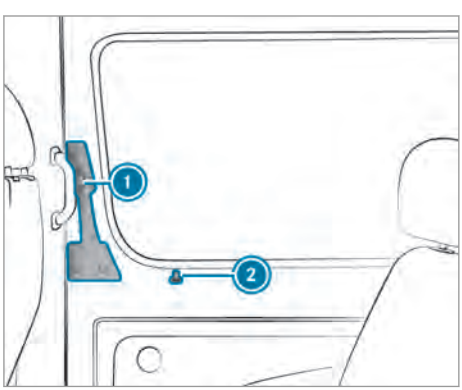

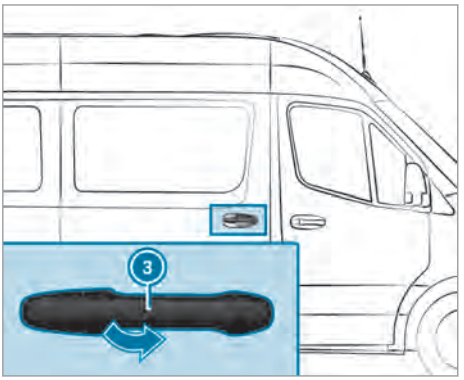

- **To unlock:** pull locking pin ② upwards manually or use the central locking button to unlock the sliding door (→ page 44).
- Press button ① or pull outside handle ③.
  The sliding door opens or closes.
- Press button ① again or pull outside handle ③.
  The sliding door stops moving.

Unlocking the electric sliding door manually

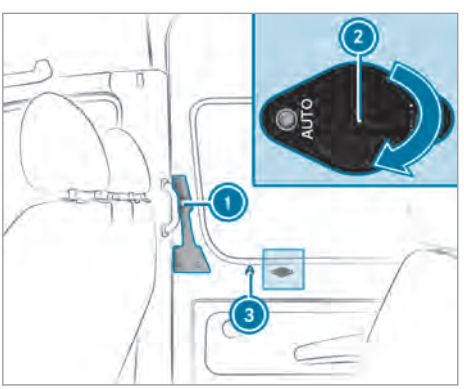

If there has been a malfunction or if the battery has been disconnected, you can use release catch ② to disconnect the sliding door from the electric motor. Then, you can open or close the door manually.

- **Vehicles with complete sliding door trim:** remove the cover from release catch ②.
  Service operation is accessible.
- **To disconnect the sliding door from the electric motor:** turn release catch ② 180° clockwise.
  The "MAN" position is set.
- **To unlock:** pull locking pin ③ upwards manually or use the central locking button to unlock the sliding door (→ page 44).
- Press button ①.
- Open or close the sliding door with the outside/inside door handle.
- **To connect the sliding door to the electric motor:** turn release catch ② 180° counterclockwise.
  The "AUTO" position is set.
- Adjust the sliding door (→ page 49).

If it is not possible to rectify the malfunction:

- Visit a qualified specialist workshop.

Resetting the electric sliding door

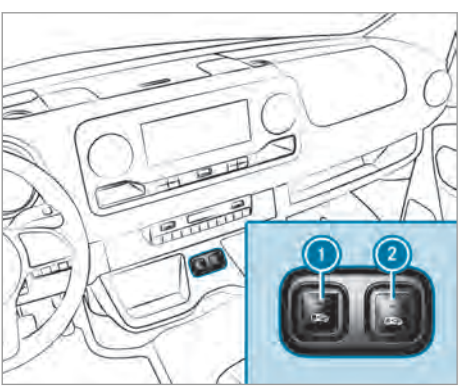

Sliding door buttons on the center console

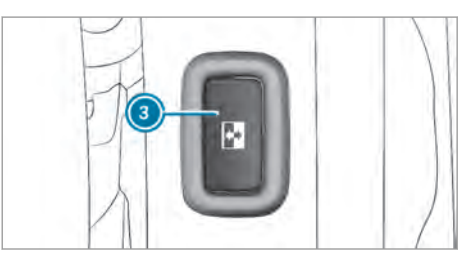

Sliding door button on the door sill (B-pillar)

You must reset the sliding door if there has been a malfunction or a voltage supply interruption.

- If the sliding door is open: press button ① or ② on the center console or sliding door button ③ on the door sill (B-pillar) and hold until the door is closed.

or

- Close the sliding door with the door handle (→ page 48).
- Then briefly press button ① or ② on the center console or sliding door button ③ on the door sill (B-pillar) once, or pull the door handle (→ page 48) to completely open the sliding door.
  The sliding door is operational.

Rear-end doors

Opening and closing the rear-end doors from outside

WARNING Risk of accident and injury when opening the rear-end door in poor traffic conditions

When you open a rear-end door, the following is possible:

- Other people or road users may be endangered
- You may be caught by oncoming traffic

This is particularly the case if you open the rear-end door more than 90°.

- Only open the rear-end doors when traffic conditions permit.
- Always make sure that the rear-end doors are properly locked.

Opening the right rear-end door

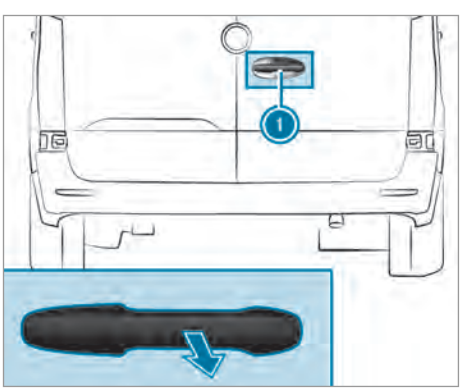

- Pull handle ①.
- Swing the rear-end door to the side until it engages.

Opening the left rear-end door

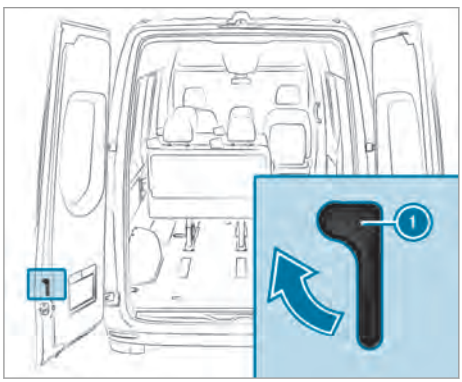

- Make sure that the right rear-end door is open and engaged.
- Pull release handle ① in the direction of the arrow.
- Swing the rear-end door to the side until it engages.

Opening the rear-end doors fully

- Open the relevant rear-end door out past the first detent (90°).
- Open the rear-end door fully.
  The rear-end door will stay in the stop position.

Closing the rear-end doors from outside

- Close the left rear-end door firmly from outside.
- Close the right rear-end door firmly from outside.

Opening/closing the rear-end doors from the inside

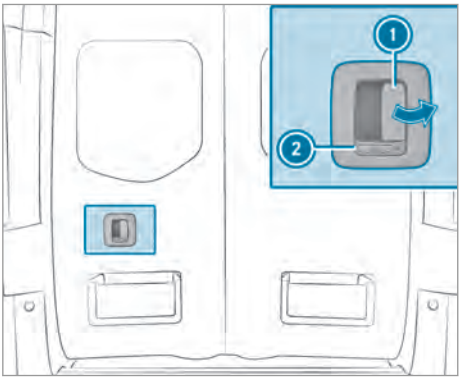

The symbol indicates that the rear-end door is unlocked.

- **To unlock:** slide latch 2 to the left. The symbol is visible.
- **To open:** pull opening lever 1 up and open the rear-end door.
- Swing the rear-end door to the side until it engages.
- **To close:** make sure that the left rear-end door is closed.
- Pull the right rear-end door firmly closed by the door handle.
- **To lock:** slide latch 2 to the right The symbol is visible.

Partition sliding door

Opening and closing the partition sliding door from the driver's compartment

WARNING Risk of becoming trapped due to non-engaged partition sliding door

If the open partition sliding door is not engaged, it can move on its own while the vehicle is in motion.

This can cause you or other people to become trapped.

- Before driving, always close the partition sliding door and ensure that it is engaged.

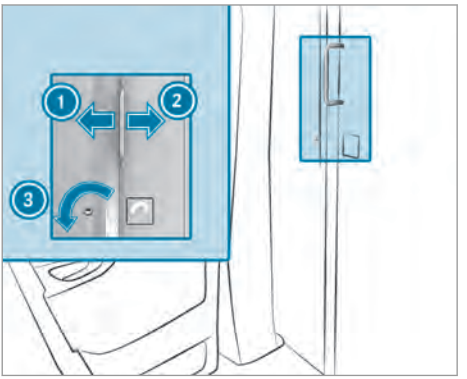

- **To open:** turn the key counter-clockwise 3. The sliding door is unlocked.
- Slide the sliding door to the right 2 as far as it will go.
- **To close:** slide the sliding door to the left 1 until it engages. You can lock the sliding door with the key.

Opening and closing the partition sliding door from the cargo compartment

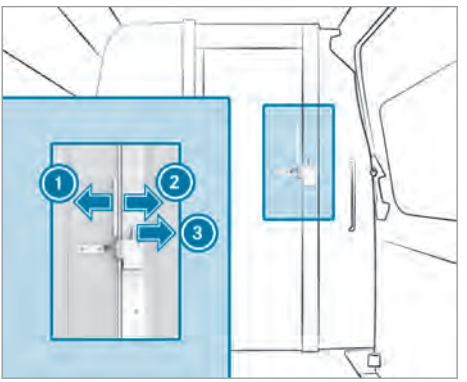

- **To open:** push the lever to the right 3. The sliding door is unlocked.
- Slide the sliding door to the left 1 as far as it will go.
- **To close:** slide the sliding door to the right 2 until it engages.

Electrical step

Function of the electrical step

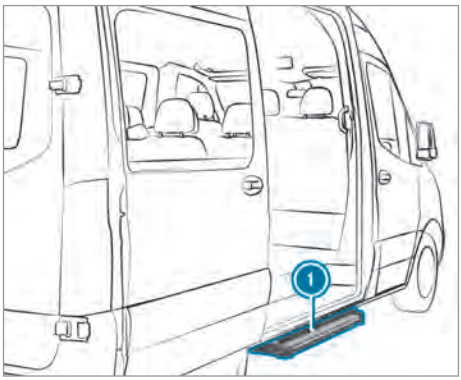

Your vehicle's sliding door may be equipped with an electrical step.

Electrical step ① automatically extends when the sliding door opens, and retracts after the sliding door closes. Electrical step ① is equipped with obstacle detection at the front. If the step meets an obstacle while extending, it stops. When you have removed the obstacle, you must first close the sliding door then re-open it so that the step extends completely.

If the electrical step prevents loading, you can block it via obstacle detection when the sliding door opens. The electrical step then remains retracted and a fork-lift truck or other lifting vehicle can move closer to the load area.

ⓘ The display shows the Step Not Extended See Operator's Manual message or the step not extended malfunction message.
When the ignition is switched off, a warning tone sounds if obstacle detection is blocked. The tone lasts two minutes.
When the ignition is switched on, the warning tone sounds continuously.

Vehicles with an Instrument Display (color display): if the display shows the Step Not Retracted See Operator's Manual message or Step Not Extended See Operator's Manual message and a warning tone sounds, electrical step ① is malfunctioning (→ page 266).

If electrical step ① is malfunctioning, the step may not extend or retract, or only partially. After a malfunction occurs, you must retract and lock electrical step ① manually in order to continue driving (→ page 52). Before passengers exit the vehicle, inform them that electrical step ① may be missing.

Releasing the electrical step in an emergency (manual retraction)

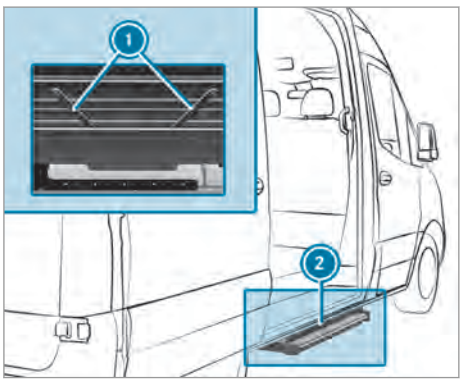

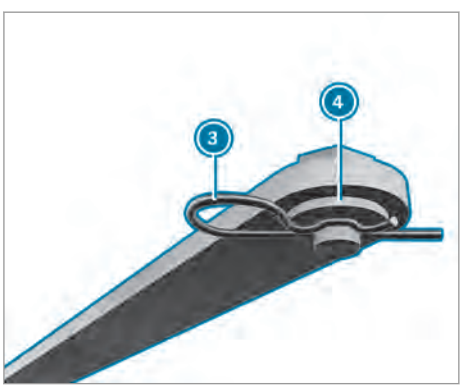

If the electrical step does not automatically retract, you must manually retract the step and lock it in order to continue driving.

▶ On the underside of step ② on both bars ① remove the spring cotters ③ from the pin.

▶ Remove the washers ④ and detach both bars.

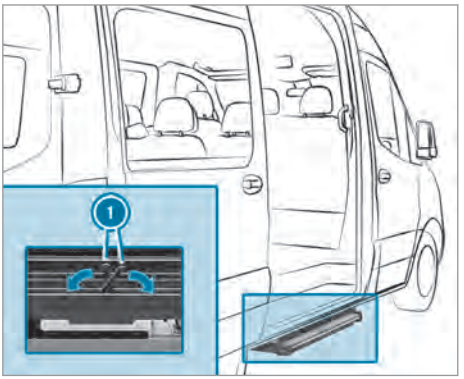

- Fold bars (1) into the step's housing.
- Slide the step into its housing.

ⓘ When securing the step for the first time, you must puncture a foil with the spring cotters.

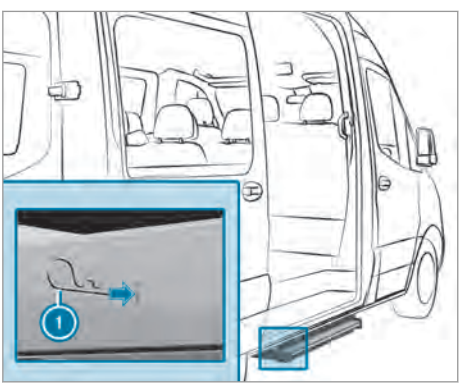

- On both sides, insert spring cotters (1) through the housing's holes and into the step as far as they will go.
  The step has been secured in its housing.

Side window

Opening and closing the side windows

⚠ WARNING Risk of entrapment when opening a side window

When opening a side window, parts of the body could be drawn in or become trapped between the side window and window frame.

- When opening, make sure that nobody is touching the side window.
- If someone is trapped, release the button immediately or pull it in order to close the side window again.

⚠ WARNING Risk of becoming trapped when closing a side window

When closing a side window, body parts could be trapped in the closing area in the process.

- When closing, make sure that no body parts are in the closing area.
- If someone is trapped, release the button immediately or press the button in order to reopen the side window.

⚠ WARNING Risk of becoming trapped when children operate the side windows

Children could become trapped if they operate the side windows, particularly when unattended.

- Activate the child safety lock for the rear side windows.
- When leaving the vehicle, always take the SmartKey with you and lock the vehicle.
- Never leave children unattended in the vehicle.

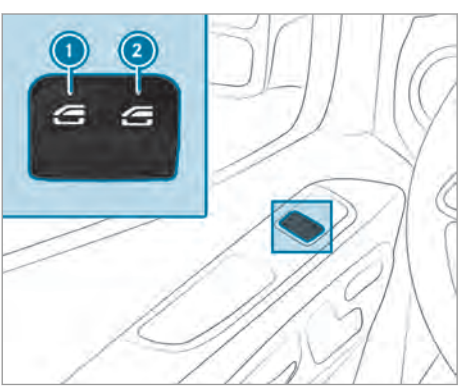

(1) Power window, left
(2) Power window, right

- **To open manually:** press and hold button (1) or (2).
- **To close manually:** pull and hold button (1) or (2).

The windows in the front doors can also be operated automatically.

▶ **To open completely:** briefly press button ① or ② beyond the point of resistance. Automatic operation will start.

▶ **To close completely:** briefly pull button ① or ② beyond the point of resistance. Automatic operation will start.

▶ **To interrupt automatic operation:** briefly press or pull button ① or ② again.

ⓘ If an object blocks a side window during the automatic closing process, the side window will open again automatically. The automatic reversing function is only an aid and is not a substitute for your attentiveness.

ⓘ If automatic operation of the side windows does not work, there is no anti-entrapment function.

Automatic reversing function of the side windows

If an object blocks a side window during the closing process, the side window will open again automatically. The automatic reversing function is only an aid and is not a substitute for your attentiveness.

▶ During the closing process, make sure that no body parts are in the closing area.

⚠ **WARNING** Risk of becoming trapped despite there being reverse protection on the side window

The reverse function does not react:

- To soft, light and thin objects, e.g. fingers
- Over the last ⅙ in (4 mm) of the closing path
- During resetting
- When the side window is closed again manually immediately after automatic reversing

This means that the reverse function cannot prevent someone from becoming trapped in these situations.

▶ During the closing process, make sure that no body parts are in the closing area.

▶ If someone becomes trapped, press the button to open the side window again.

Ventilating the vehicle before starting a journey (convenience opening)

⚠ **WARNING** Risk of entrapment when opening a side window

When opening a side window, parts of the body could be drawn in or become trapped between the side window and window frame.

▶ When opening, make sure that nobody is touching the side window.

▶ Release the button immediately if somebody becomes trapped.

You can ventilate the vehicle before you start driving.

To do this, the key is used to carry out the following functions simultaneously:

- unlock the vehicle
- open the side windows

The "convenience opening" function can only be operated using the key. The key must be in close proximity to the driver's or front-passenger door.

▶ Press and hold the button on the key.

The following functions are performed:

- the vehicle is unlocked
- the side windows are opened

▶ **To interrupt convenience opening:** release the button.

Closing side windows from the outside (convenience closing)

⚠ **WARNING** Risk of entrapment caused by inadvertent convenience closing

When the convenience closing feature is operating, parts of the body could become trapped in the closing area of the side windows.

▶ Observe the complete closing procedure when using convenience closing.

▶ When closing, make sure that no body parts are in the closing area.

▶ Press and hold the button on the key.

The following functions are performed:

- The vehicle is locked
- The side windows are closed

▶ **To interrupt convenience closing:** release the [🔒] button.

Resetting the side windows

The side windows must be reset after a malfunction or a voltage supply interruption.

▶ Switch on the ignition (→ page 103).

▶ Push both window lifter buttons and hold for approximately one second after the side window has closed.

Problems with the side windows

Problem	Possible causes/consequences and ▶ Solutions
A side window cannot be closed and the cause is not obvious.	▶ Check to see if there are any objects in the window guide. ⚠ **WARNING** Risk of becoming trapped or fatally injured if reversing protection is not activated If you close a side window again immediately after it has been blocked, the side window will close with increased or maximum force. The reversing feature will then not be active. Parts of the body could become trapped in the closing area in the process. ▶ Make sure that no parts of the body are in the closing area. ▶ To stop the closing process, release the button or press the button again to re-open the side window. If a side window is obstructed during closing, and reopens again slightly, you can proceed as follows: ▶ Immediately after the window is obstructed, pull the corresponding button again until the side window has closed, and hold the button for an additional second. The side window is closed with increased force. If the side window is obstructed again and reopens slightly, you can proceed as follows: ▶ Repeat the previous step. The side window is closed without the automatic reversing function.
The side windows cannot be opened or closed using the convenience opening feature.	The SmartKey battery is weak or discharged. ▶ Check the battery with the battery check lamp and replace if necessary (→ page 42).

Anti-theft protection

Function of the immobilizer

The immobilizer prevents your vehicle from being started without the correct key.

The immobilizer is automatically activated when the ignition is switched off, and deactivated when the ignition is switched on.

When leaving the vehicle, always take the key with you and lock the vehicle. If the key is left inside the vehicle, anyone can start the engine.

ⓘ In the event the engine does not start despite the vehicle's starter battery having sufficient charge, the immobilizer is defective. Contact a qualified specialist workshop or call 1-800-367-6372 (in the USA) or 1-800-387-0100 (in Canada).

ATA (Anti-Theft Alarm system)

Function of ATA (Anti-theft Alarm system)

If the ATA system is armed, a visual and audible alarm is triggered in the following situations:

- a side door is opened
- the rear-end door is opened
- the hood is opened
- the interior motion sensor is triggered (→ page 57)
- the tow-away alarm is triggered (→ page 56)

ATA is automatically armed after approximately five seconds in the following situation:

- after the vehicle has been locked with the SmartKey

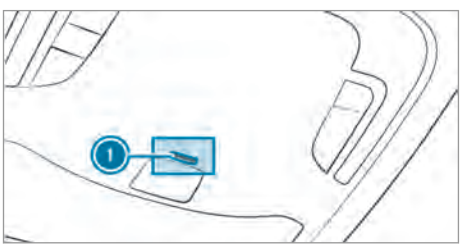

When the ATA system is armed, indicator lamp (1) flashes in the overhead control panel.

ATA is automatically deactivated in the following situations:

- After unlocking the vehicle with the SmartKey.
- After pressing the start/stop button with the SmartKey inside the vehicle.

Arming/disarming ATA (Anti-theft Alarm system)

If the alarm system is armed, a visual and audible alarm is triggered in the following situations:

- A door is opened
- The hood is opened

ⓘ The alarm is not deactivated, even if you immediately close the open door that has triggered it, for example.

Arming

▶ Close all the doors.

▶ Lock the vehicle with the SmartKey. Indicator lamp (1) in the overhead control panel flashes.

Disarming

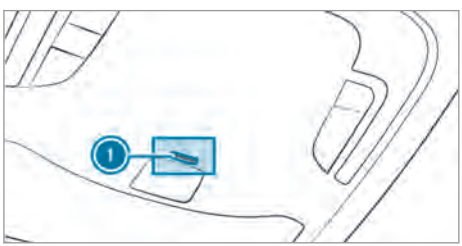

▶ Unlock the vehicle with the SmartKey. Indicator lamp (1) in the overhead control panel goes out.

ⓘ The vehicle locks again automatically if you do not open a door within 40 seconds after unlocking the vehicle.

Stopping the alarm

▶ Press the [🔓] or [🔒] button on the SmartKey.

or

▶ Press the start/stop button with the SmartKey inside the vehicle. The alarm stops.

Function of the tow-away alarm

Function of the tow-away alarm

A visual and audible alarm is triggered if the inclination of the vehicle changes when the tow-away alarm is activated. This can be the case if the vehicle is raised on one side, for example.

Arming/disarming the tow-away alarm

Arming/disarming

▶ Lock the vehicle with the key.
The tow-away alarm is automatically armed after about 40 seconds:

▶ Open the vehicle with the key.
The tow-away alarm is deactivated.

The tow-away alarm is only armed when the following components are closed:

- the driver's door and the front-passenger door
- the side doors
- the rear-end doors

Deactivating

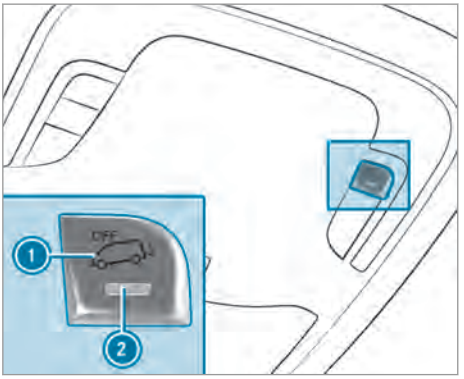

▶ Switch off the power supply (→ page 103).

▶ Press button ①.
When the button is released, indicator lamp ② in the button lights up for approximately five seconds.

▶ Lock the vehicle with the key.
The tow-away alarm is deactivated.

The tow-away alarm remains deactivated until you lock the vehicle again.

Deactivate the tow-away alarm when locking your vehicle in the following situations:

- when loading and/or transporting the vehicle on a ferry or car transporter, for example
- when parking the vehicle on a movable surface, such as a split-level garage

This will prevent false alarms.

Interior motion sensor

Function

If the activated the interior motion sensor detects motion in the vehicle interior, a visual and acoustic alarm is triggered. This can happen if someone reaches into the vehicle interior, for example.

Activating/deactivating the interior motion sensor

Activating

▶ Close the side windows.

▶ Make sure that nothing (such as mascots or coat hangers) is hanging on the inside rear-view mirror or on the grab handles on the headliner. This will prevent false alarms.

▶ Lock the vehicle with the key.
The interior motion sensor is activated after approximately 30 seconds.

The interior motion sensor is only activated when the following components are closed:

- the driver's door and the co-driver door
- the side doors
- the rear-end doors

Deactivating

▶ Unlock the vehicle with the key.
The interior motion sensor automatically switches off.

Deactivating

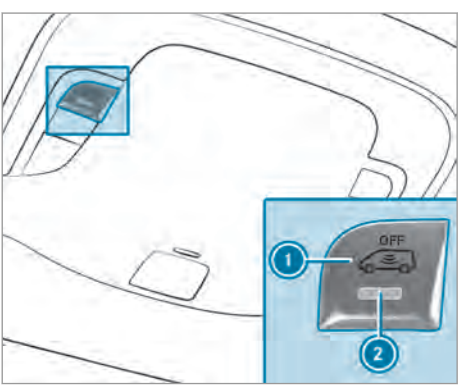

▶ Switch off the power supply (→ page 103).

▶ Press button ①.
When the button is released, indicator lamp ② in the button lights up for about five seconds.

▶ Lock the vehicle with the key.
The interior motion sensor is deactivated.

The interior motion sensor remains deactivated until you lock the vehicle again.

Deactivate the interior motion sensor when locking your vehicle in the following situations:

- if there are people or animals remaining inside
- if the side windows remain open
- when transporting the vehicle on a ferry or car transporter, for example

This will prevent false alarms.

Correct driver's seat position

WARNING Risk of injury from adjusting the vehicle settings while the vehicle is in motion

You could lose control of the vehicle in the following situations:

- if you adjust the driver's seat, the head restraint, the steering wheel or the mirror while the vehicle is in motion
- if you fasten your seat belt while the vehicle is in motion

▶ Before starting the engine: adjust the driver's seat, the head restraint, the steering wheel or the mirror and fasten your seat belt.

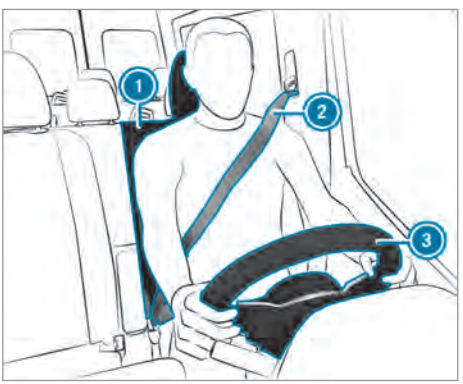

Comply with the following when adjusting steering wheel ③, seat belt ② and driver's seat ①:

- Sit as far away as possible from the driver's airbag.
- Sit in an upright position.
- Your thighs are slightly supported by the seat cushion.
- Your legs are not fully extended and you can easily fully press on the pedals.
- The back of your head is supported at eye level by the middle part of the head restraint.
- You can reach the steering wheel with your arms in a slightly bent position.
- You can move your legs freely.
- You can easily see all displays on the instrument display.
- You have a good overview of the traffic situation.
- Your seat belt fits securely around your body and runs across the middle of your shoulder, your pelvic area and groin.

Seats

Adjusting the front seats manually (without Seat Comfort Package)

WARNING Risk of becoming trapped if the seats are adjusted by children

Children could become trapped if they adjust the seats, particularly when unattended.

▶ When leaving the vehicle, always take the SmartKey with you and lock the vehicle.

▶ Never leave children unattended in the vehicle.

WARNING Risk of becoming trapped when adjusting the seats

When you adjust a seat, you or other vehicle occupants could become trapped, e.g. on the seat guide rail.

▶ When adjusting a seat, make sure that no one has any body parts in the sweep of the seat.

Observe the safety notes on "Airbags" and "Children in the vehicle".

WARNING Risk of accident due to the driver's seat not being engaged

If the driver's seat is not engaged, it could move unexpectedly while the vehicle is in motion.

This could cause you to lose control of the vehicle.

▶ Always make sure that the driver's seat is engaged before starting the vehicle.

WARNING Risk of injury from adjusting the vehicle settings while the vehicle is in motion

You could lose control of the vehicle in the following situations:

- if you adjust the driver's seat, the head restraint, the steering wheel or the mirror while the vehicle is in motion

- if you fasten your seat belt while the vehicle is in motion

▶ Before starting the engine: adjust the driver's seat, the head restraint, the steering wheel or the mirror and fasten your seat belt.

⚠ **WARNING** Risk of becoming trapped if the seat height is adjusted carelessly

If you adjust the seat height carelessly, you or other vehicle occupants could be trapped and thereby injured.

Children in particular could accidentally press the electrical seat adjustment buttons and become trapped.

▶ While moving the seats, make sure that hands or other body parts do not get under the lever assembly of the seat adjustment system.

⚠ **WARNING** Risk of injury due to head restraints which are not installed or are adjusted incorrectly

If head restraints are not installed or are adjusted incorrectly, the head restraints cannot provide protection as intended.

There is an increased risk of injury in the head and neck area, e.g. in the event of an accident or when braking.

▶ Always drive with the head restraints installed.

▶ Before driving off, make sure for every vehicle occupant that the center of the head restraint supports the back of the head at about eye level.

Do not interchange the head restraints of the front and rear seats. Otherwise, you will not be able to adjust the height and angle of the head restraints correctly.

Adjust the head restraint fore-and-aft position so that it is as close as possible to the back of your head.

⚠ **WARNING** Risk of injury or death due to incorrect seat position

The seat belt does not offer the intended level of protection if you have not moved the seat backrest to an almost vertical position.

When braking or in the event of an accident, you could slide underneath the seat belt and sustain abdominal or neck injuries, for example.

▶ Adjust the seat properly before beginning your journey.

▶ Always ensure that the seat backrest is in an almost vertical position and that the shoulder section of your seat belt is routed across the center of your shoulder.

! **NOTE** Damage to the seats when moving the seats back

The seats may be damaged by objects when moving the seats back.

▶ When moving the seats back, make sure that there are no objects in the footwell, under or behind the seats.

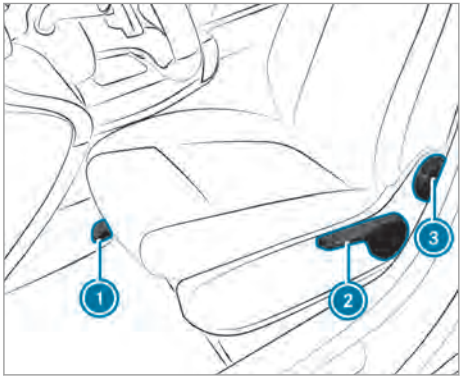

① Seat fore-and-aft position
② Seat height
③ Seat backrest inclination

ⓘ Depending on the seat model, individual adjustment options may be omitted.

▶ **To adjust the seat fore-and-aft position:** lift lever ① and slide the seat into the desired position.

▶ Make sure that the seat is engaged.

▶ **To set the seat height:** keep on pressing or pulling lever ② until the required seat height is reached.

▶ **To adjust the seat backrest inclination:** turn handwheel ③ forwards and backwards until the desired position has been reached.

Adjusting the front seats manually (with Seat Comfort Package)

⚠ **WARNING** Risk of becoming trapped if the seats are adjusted by children

Children could become trapped if they adjust the seats, particularly when unattended.

▶ When leaving the vehicle, always take the SmartKey with you and lock the vehicle.

▶ Never leave children unattended in the vehicle.

⚠ **WARNING** Risk of becoming trapped when adjusting the seats

When you adjust a seat, you or other vehicle occupants could become trapped, e.g. on the seat guide rail.

▶ When adjusting a seat, make sure that no one has any body parts in the sweep of the seat.

Observe the safety notes on "Airbags" and "Children in the vehicle".

⚠ **WARNING** Risk of accident due to the driver's seat not being engaged

If the driver's seat is not engaged, it could move unexpectedly while the vehicle is in motion.

This could cause you to lose control of the vehicle.

▶ Always make sure that the driver's seat is engaged before starting the vehicle.

⚠ **WARNING** Risk of injury from adjusting the vehicle settings while the vehicle is in motion

You could lose control of the vehicle in the following situations:

- if you adjust the driver's seat, the head restraint, the steering wheel or the mirror while the vehicle is in motion
- if you fasten your seat belt while the vehicle is in motion

▶ Before starting the engine: adjust the driver's seat, the head restraint, the steering wheel or the mirror and fasten your seat belt.

⚠ **WARNING** Risk of becoming trapped if the seat height is adjusted carelessly

If you adjust the seat height carelessly, you or other vehicle occupants could be trapped and thereby injured.

Children in particular could accidentally press the electrical seat adjustment buttons and become trapped.

▶ While moving the seats, make sure that hands or other body parts do not get under the lever assembly of the seat adjustment system.

⚠ **WARNING** Risk of injury due to head restraints which are not installed or are adjusted incorrectly

If head restraints are not installed or are adjusted incorrectly, the head restraints cannot provide protection as intended.

There is an increased risk of injury in the head and neck area, e.g. in the event of an accident or when braking.

▶ Always drive with the head restraints installed.

▶ Before driving off, make sure for every vehicle occupant that the center of the head restraint supports the back of the head at about eye level.

Do not interchange the head restraints of the front and rear seats. Otherwise, you will not be able to adjust the height and angle of the head restraints correctly.

Adjust the head restraint fore-and-aft position so that it is as close as possible to the back of your head.

⚠ **WARNING** Risk of injury or death due to incorrect seat position

The seat belt does not offer the intended level of protection if you have not moved the seat backrest to an almost vertical position.

When braking or in the event of an accident, you could slide underneath the seat belt and sustain abdominal or neck injuries, for example.

▶ Adjust the seat properly before beginning your journey.

▶ Always ensure that the seat backrest is in an almost vertical position and that

the shoulder section of your seat belt is routed across the center of your shoulder.

NOTE Damage to the seats when moving the seats back

The seats may be damaged by objects when moving the seats back.

▶ When moving the seats back, make sure that there are no objects in the footwell, under or behind the seats.

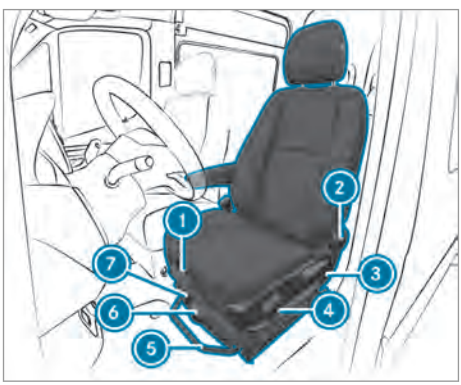

Sample image of comfort suspension seat

1. Seat cushion length
2. Seat backrest inclination
3. Seat height
4. Seat cushion inclination
5. Seat fore-and-aft position
6. Seat suspension
7. Vibration limiting

ⓘ Depending on the seat model, individual adjustment options may be omitted.

▶ **To adjust the seat cushion length:** lift lever ① and slide the front section of the seat cushion forwards or backwards.

▶ **To adjust the seat backrest inclination:** turn handwheel ② forwards and backwards until the desired position has been reached.

▶ **To adjust the seat height:** push or pull lever ③ until the desired position has been reached.

▶ **To adjust the seat cushion inclination:** turn handwheel ④ forwards and backwards until the desired position has been reached.

▶ **To adjust the seat fore-and-aft position:** lift lever ⑤ and slide the seat into the desired position.

▶ Make sure that the seat is engaged.

▶ **To set the seat suspension:** take the weight off the seat.

▶ On handwheel ⑥, set the body weight (88 lb (40 kg) to 264 lb (120 kg)) so that the seat suspension works optimally. If you set a higher weight, the seat suspension will become firmer. The seat will then not vibrate as much. If the seat vibrates often and significantly, you can engage the seat in the lower area.

▶ **To engage vibration limiting:** turn lever ⑦ upwards.
The next time the seat vibrates, it will engage.

▶ **To release vibration limiting:** turn lever ⑦ to the right.
The seat can vibrate.

Adjusting the front seat electrically

WARNING Risk of becoming trapped if the seats are adjusted by children

Children could become trapped if they adjust the seats, particularly when unattended.

▶ When leaving the vehicle, always take the SmartKey with you and lock the vehicle.

▶ Never leave children unattended in the vehicle.

The seats can be adjusted while the ignition is off.

WARNING Risk of becoming trapped when adjusting the seats

When you adjust a seat, you or other vehicle occupants could become trapped, e.g. on the seat guide rail.

▶ When adjusting a seat, make sure that no one has any body parts in the sweep of the seat.

Comply with the safety notes on "Airbags" and "Children in the vehicle".

WARNING Risk of accident due to the driver's seat not being engaged

If the driver's seat is not engaged, it could move unexpectedly while the vehicle is in motion.

This could cause you to lose control of the vehicle.

▶ Always make sure that the driver's seat is engaged before starting the vehicle.

WARNING Risk of injury from adjusting the vehicle settings while the vehicle is in motion

You could lose control of the vehicle in the following situations:

- if you adjust the driver's seat, the head restraint, the steering wheel or the mirror while the vehicle is in motion
- if you fasten your seat belt while the vehicle is in motion

▶ Before starting the engine: adjust the driver's seat, the head restraint, the steering wheel or the mirror and fasten your seat belt.

WARNING Risk of becoming trapped if the seat height is adjusted carelessly

If you adjust the seat height carelessly, you or other vehicle occupants could be trapped and thereby injured.

Children in particular could accidentally press the electrical seat adjustment buttons and become trapped.

▶ While moving the seats, make sure that hands or other body parts do not get under the lever assembly of the seat adjustment system.

WARNING Risk of injury due to head restraints which are not installed or are adjusted incorrectly

If head restraints are not installed or are adjusted incorrectly, the head restraints cannot provide protection as intended.

There is an increased risk of injury in the head and neck area, e.g. in the event of an accident or when braking.

▶ Always drive with the head restraints installed.

▶ Before driving off, make sure for every vehicle occupant that the center of the head restraint supports the back of the head at about eye level.

Do not interchange the head restraints of the front and rear seats. Otherwise, you will not be able to set the height and inclination of the head restraints to the correct position.

Using the head restraint fore/aft adjustment, adjust the head restraint in such a way that it is as close to the back of the head as possible.

WARNING Risk of injury or death due to incorrect seat position

The seat belt does not offer the intended level of protection if you have not moved the seat backrest to an almost vertical position.

When braking or in the event of an accident, you could slide underneath the seat belt and sustain abdominal or neck injuries, for example.

▶ Adjust the seat properly before beginning your journey.

▶ Always ensure that the seat backrest is in an almost vertical position and that the shoulder section of your seat belt is routed across the center of your shoulder.

NOTE Damage to the seats when moving the seats back

The seats may be damaged by objects when moving the seats back.

▶ When moving the seats back, make sure that there are no objects in the footwell, under or behind the seats.

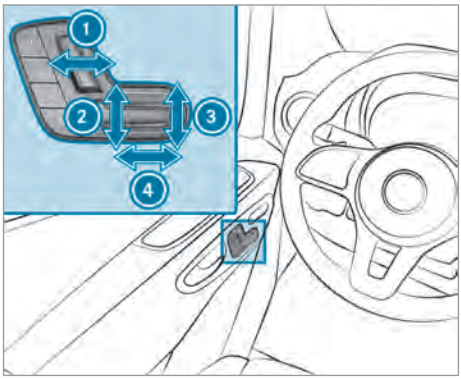

1. Seat backrest inclination
2. Seat height
3. Seat cushion inclination
4. Seat fore-and-aft adjustment

▶ Save the settings with the memory function (→ page 64).

Setting 4-way lumbar support

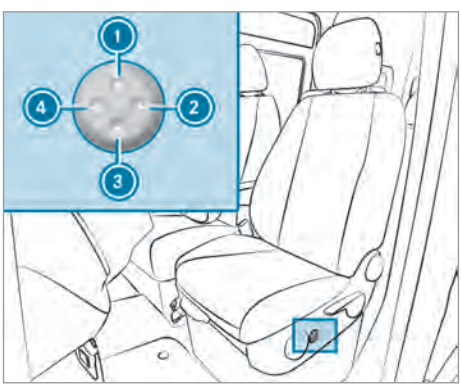

1. Higher
2. Weaker
3. Lower
4. Stronger

▶ Use buttons 1 to 4 to adjust the backrest curvature individually to your spine.

Operating the memory function

WARNING Risk of an accident if the memory function is used while driving

If you use the memory function on the driver's side while driving, you could lose control of the vehicle as a result of the adjustments being made.

▶ Only use the memory function on the driver's side when the vehicle is stationary.

WARNING Risk of entrapment when setting the seat with the memory function

When the memory function adjusts the seat, you and other vehicle occupants – particularly children – could become trapped.

▶ During the adjustment process of the memory function, make sure that no one has any body parts in the sweep of the seat.

▶ If somebody becomes trapped, immediately release the memory function position button.
The adjustment process is stopped.

WARNING Risk of entrapment if the memory function is activated by children

Children could become trapped if they activate the memory function, particularly when unattended.

▶ Never leave children unattended in the vehicle.

▶ When leaving the vehicle, always take the key with you and lock the vehicle.

The memory function can be used when the ignition is switched off.

Storing seat settings
Seat settings for up to three people can be stored and called up using the memory function. You can adjust the seat and the backrest.

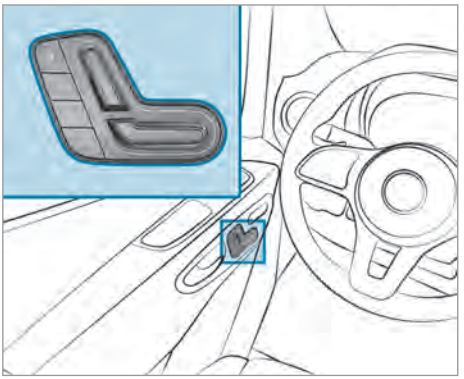

- Adjust the seat into the desired position.
- Press memory button M together with one of the preset position buttons 1, 2 or 3.
  An acoustic signal sounds. The settings are stored.
- **To call up:** press and hold the relevant preset position button 1, 2 or 3 until the front seat is in the stored position.

Rotating the front seats

WARNING Risk of injury or death if the driver's seat and front-passenger seat are not engaged

If the driver's and front-passenger seats are not engaged in the direction of travel during the trip, the restraint systems cannot offer protection as intended.

- Engage the driver's and front-passenger seat in the direction of travel before the engine is started.

WARNING Risk of injury from adjusting the vehicle settings while the vehicle is in motion

You could lose control of the vehicle in the following situations:

- if you adjust the driver's seat, the head restraint, the steering wheel or the mirror while the vehicle is in motion
- if you fasten your seat belt while the vehicle is in motion

- Before starting the engine: adjust the driver's seat, the head restraint, the steering wheel or the mirror and fasten your seat belt.

You can rotate the driver's and front-passenger seat 50 ° and 180 °. The seats engage both in and opposite to the direction of travel as well as at 50 ° to the exit.

- Ensure that the parking brake is applied and the brake lever is folded downwards as far as it will go (→ page 133).
- Adjust the steering wheel in such a way that there is sufficient free space to rotate and adjust the driver's seat (→ page 71).
- Slide the front-passenger seat forward before rotating it (→ page 59).
- **To rotate the seat:** push lever (1) towards the vehicle center and rotate the seat slightly inwards.
  The rotation device is unlocked.
- Release lever (1) again.
- Rotate the seat by around 50 ° outwards or inwards into the required position.

Adjusting armrests

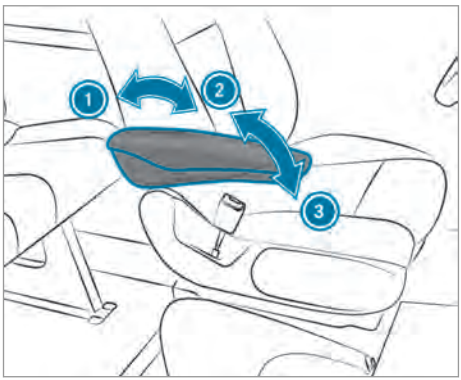

Example image

- **To set the armrest inclination:** fold the armrest more than 45 ° upwards ②.
  The armrest is released.
- Fold the armrest forwards ③ as far as it will go.
- Slowly fold the armrest upwards into the required position.
- **To fold the armrest upwards:** if necessary, fold the armrest more than 90 ° upwards ①.

Folding the folding seat up or down

⚠ **WARNING** Risk of injury when using the folding seat due to inserted key

When the key is in the lock of the partition sliding door, it can come into contact with the person on the folding seat.

- Always remove the key from the partition sliding door before a person sits on the folding seat.

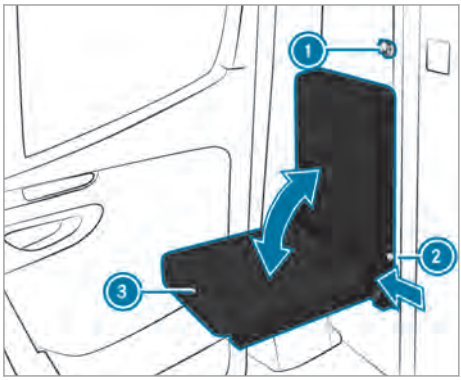

- Remove key ① from the partition sliding door.
- Press the push button on catch ② and fold seat cushion ③ up or down.
- Release push button on catch ② when seat cushion ③ reaches its end position.
- Move seat cushion ③ until it has locked. The push button on catch ② must be completely flush with the seat frame.

Installing and removing the rear bench seat

⚠ **WARNING** Risk of injury if rear bench seat is installed incorrectly

If you do not install the rear bench seat as described, or install an unsuitable rear bench seat, the seat belts may not provide the intended protection.

- Install the rear bench seat as described and only in the direction of travel.
- Installing the rear bench seat in the opposite direction is not permitted.
- Use only rear bench seats approved for your vehicle by Mercedes-Benz.

⚠ **WARNING** Risk of injury if the rear bench seat is not locked in place

If the locking mechanisms on the rear bench seat legs are not correctly engaged, the rear bench seat will not be held firmly and could roll over during travel.

- Ensure that the rear bench seat is engaged before setting off. There must be no red indicator tabs visible on the release handle.

▶ If red indicator tabs are visible on the release handle, re-engage the rear bench seat into place.

WARNING Risk of injury when installing and removing the rear bench seat

When you install or remove the rear bench seat, body parts such as feet may become trapped when the rear bench seat is tipped.

▶ When installing and removing the rear bench seat, ensure that there are no body parts between the rear bench seat and the floor.

NOTE Damage to rear bench seat rollers caused by incorrect use

The rear bench seat rollers can be damaged if the rear bench seat is used improperly or is removed incorrectly.

▶ As long as the rear bench seat is in the mounting shells, do not pull these in the direction of the rear-end doors. Roll the rear bench seat only beside the mounting shells.

▶ Do not roll the rear bench seat when it has been removed or use it as a means of transport.

Warning on rear bench seat with correctly installed rear bench seat shown.

Installation position of three-person and four-person rear bench seat with strut

The three-person rear bench seat is available with or without a strut. The four-person rear bench seat is available only with a strut.

The strut is located on the rear side of the rear bench seat.

The three-person rear bench seat with strut must be installed only on the third row of seats (above the rear axle). The four-person rear bench seat must be installed only on the last row of seats.

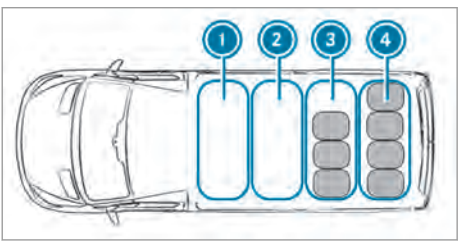

Vehicles with four rows of seats

1. First row of seats
2. Second row of seats
3. Third row of seats: three-person rear bench seat with strut
4. Fourth row of seats: four-person rear bench seat with strut

▶ Install the three-person rear bench seat on third row of seats 3.

▶ Install the four-person rear bench seat on fourth row of seats 4.

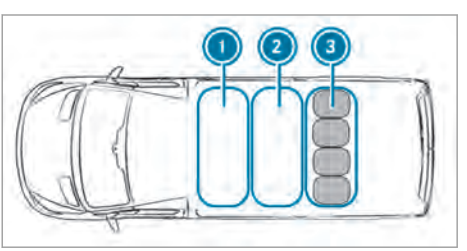

Vehicles with three rows of seats

1. First row of seats
2. Second row of seats
3. Third row of seats: four-person rear bench seat with strut

▶ Install the four-person rear bench seat on third row of seats 3.

Removing the rear bench seat

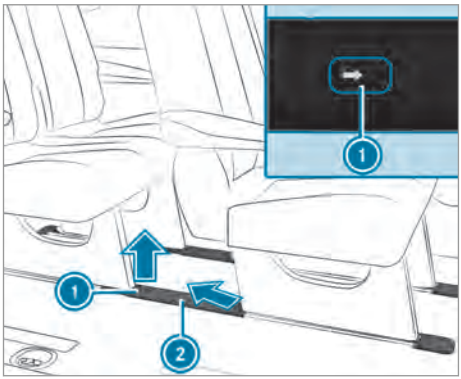

Perform these jobs carefully with the assistance of a second person.

▶ **To remove the covers of the mounting shells:** push clip ① in the direction of the arrow and detach cover ② by removing it at an angle upwards and back.

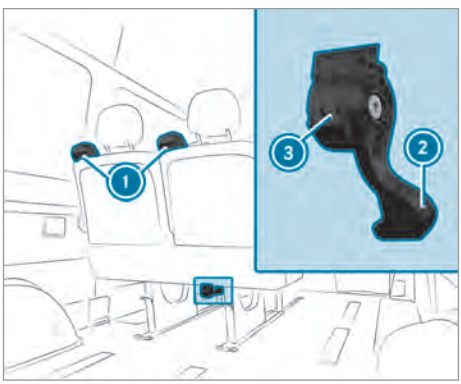

▶ Push release handle ② for the bench seat all the way down and hold it there while tilting the bench seat backwards slightly at the same time using the release handle and pull it slightly backwards.

▶ Let go of the release handle.
The locks on the bench seat legs will be unlocked and red indicator tabs ③ on the housing of release handle ② will be visible.

▶ Hold the unlocked bench seat by grab handles ① and pull backwards slightly.

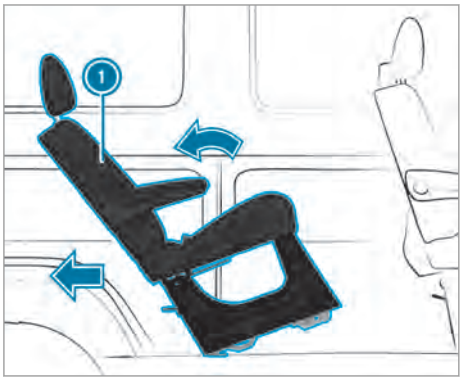

▶ Tilt bench seat ① backwards and pull it out of the mounting shells.

ⓘ If the bench seat cannot be pulled out of the mounting shells, the bench seat may be wedged in the seat anchorage. This can happen if the bench seat is tilted too far backwards.

If the bench seat cannot be pulled out of the mounting shells, you can rectify this situation as follows:

▶ Tilt the bench seat forwards without engaging it.

▶ Pull the bench seat backwards again using release handle ②.

▶ Tilt the bench seat backwards slightly and pull it out of the mounting shells.

▶ To remove or store the bench seat, place it next to the mounting shells and roll it towards the rear-end doors.

or

▶ Lift the bench seat out from the side to store it.

ⓘ It may be necessary for the bench seats in front or behind to be removed.

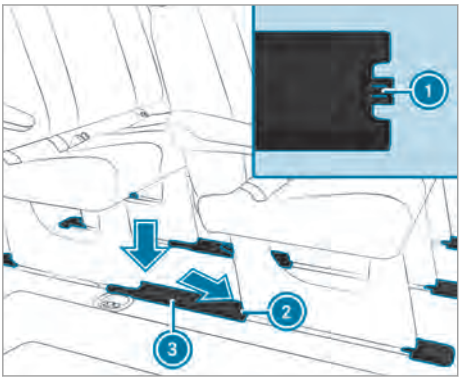

- **To attach the covers of the mounting shells:** hold cover ③ such that retaining lug ① is pointing towards rear seat anchorage ②.
- Insert cover ③ into rear seat anchorage ② by pushing it downwards at an angle and then clip it to the mounting shell.
- After removing the rear bench seat, ensure that the rear bench seat can stand securely and do not tip over when in storage.

Installing the rear bench seat

Secure engagement of the rear bench seat is guaranteed only if you keep the seat anchorages clean and free of objects.

ⓘ In vehicles registered as passenger vehicles, observe the maximum permitted number of seats.

- Remove the covers of the mounting shells as described under "Removing the rear bench seat".
- Ensure that there are no objects in the seat anchorages and mounting shells.
- Position the bench seat behind the installation position.
- Hold the bench seat by the grab handles and tilt it backwards.
- Roll the bench seat forwards on the level plastic carriers.
- Ensure that the rear legs of the bench seat are engaged.

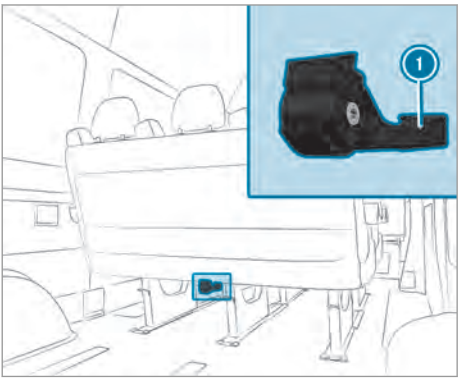

- Tilt the bench seat forwards firmly until the locks on the front legs of the bench seat engage audibly.
  The locks on the front legs of the bench seat will now be locked and the red indicator tabs on the housing of release handle ① should no longer be visible.

ⓘ If the red indicator tabs on the release handle housing are visible, the bench seat is not correctly engaged.

If the bench seat is not correctly engaged, you can rectify this situation as follows:

- Unlock the bench seat again and tilt it forwards firmly until the locks on the bench seat front legs engage audibly.
- Attach the covers of the mounting shells as described under "Removing the rear bench seat".

Adjusting the seat backrest of the rear bench seat

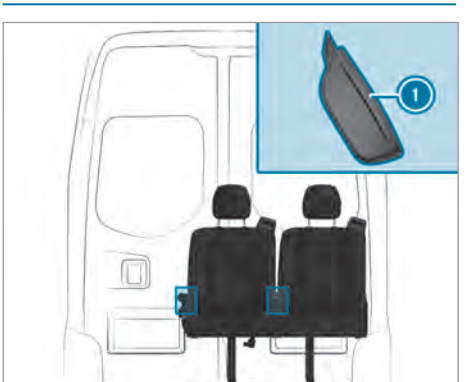

- Pull release handle ① for the seat backrest upwards and hold it in position.
- Move the seat backrest to the desired position.
- Let go of release handle ① for the seat backrest and move the seat backrest slightly. The seat backrest engages in position.

Head restraints

Adjusting the head restraints manually

WARNING Risk of injury from adjusting the vehicle settings while the vehicle is in motion

You could lose control of the vehicle in the following situations:

- if you adjust the driver's seat, the head restraint, the steering wheel or the mirror while the vehicle is in motion
- if you fasten your seat belt while the vehicle is in motion

- Before starting the engine: adjust the driver's seat, the head restraint, the steering wheel or the mirror and fasten your seat belt.

WARNING Risk of injury due to head restraints which are not installed or are adjusted incorrectly

If head restraints are not installed or are adjusted incorrectly, the head restraints cannot provide protection as intended.

There is an increased risk of injury in the head and neck area, e.g. in the event of an accident or when braking.

- Always drive with the head restraints installed.
- Before driving off, make sure for every vehicle occupant that the center of the head restraint supports the back of the head at about eye level.

Do not swap the head restraints of the front and rear seats. Otherwise, you will not be able to set the height and inclination of the head restraints to the correct position.

Using the head restraint fore/aft adjustment, adjust the head restraint in such a way that it is as close to the back of the head as possible.

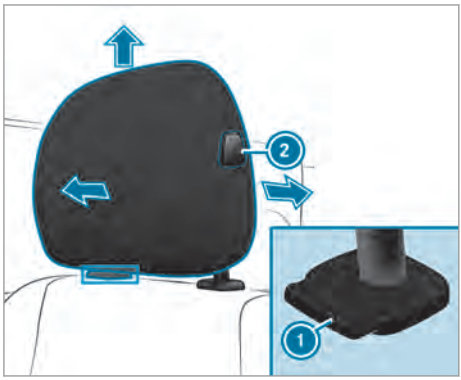

Head restraint (example of comfort head restraint on the driver's seat)

- **To raise:** pull the head restraint upwards into the required position and ensure that the head restraint is engaged.
  Only use the head restraint in the engaged state.
- **To lower:** push release button ① and slide the head restraint downwards into the required position and ensure that the head restraint is engaged.
  Only use the head restraint in the engaged state.
- **To move forwards:** push release button ② and pull the head restraint forwards until it engages in the required position.
- **To move backwards:** push release button ② and slide the head restraint backwards into the required position.

ⓘ Depending on the head restraint model, individual adjustment options may be omitted.

Switching the seat heating on and off

WARNING Risk of burns due to repeatedly switching on the seat heating

Repeatedly switching on the seat heating can cause the seat cushion and seat backrest padding to become very hot.

The health of persons with limited temperature sensitivity or a limited ability to react to high temperatures may be affected or they may even suffer burn-like injuries.

- Do not repeatedly switch on the seat heating.

To protect against overheating, the seat heating may be temporarily deactivated after it is switched on repeatedly.

NOTE Damage to the seats caused by objects or documents when the seat heater is switched on

When the seat heater is switched on, overheating can occur due to objects or documents placed on the seats e.g. seat cushions or child seats. This could cause damage to the seat surface.

▶ Make sure that no objects or documents are on the seats when the seat heater is switched on.

Requirements:

- The power supply has been switched on.

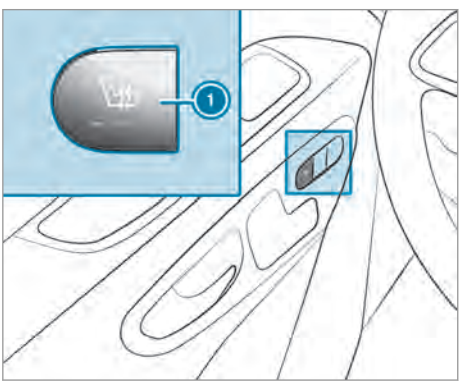

▶ **To switch on:** press button 1.
All indicator lamps on the button light up.

▶ **To lower the level:** press button 1 until the required heating level is reached.
Depending on the heating level, one to three indicator lamps light up.

▶ **To switch off:** press button 1 until all indicator lamps are off.

ⓘ The seat heating automatically switches back out of the three heating levels after 8, 10 and 20 minutes until the seat heating switches off.

Adjusting the steering wheel

WARNING Risk of injury from adjusting the vehicle settings while the vehicle is in motion

You could lose control of the vehicle in the following situations:

- if you adjust the driver's seat, the head restraint, the steering wheel or the mirror while the vehicle is in motion
- if you fasten your seat belt while the vehicle is in motion

▶ Before starting the engine: adjust the driver's seat, the head restraint, the steering wheel or the mirror and fasten your seat belt.

WARNING Risk of entrapment for children when adjusting the steering wheel

Children could injure themselves if they adjust the steering wheel.

▶ Never leave children unattended in the vehicle.

▶ When leaving the vehicle, always take the SmartKey with you and lock the vehicle.

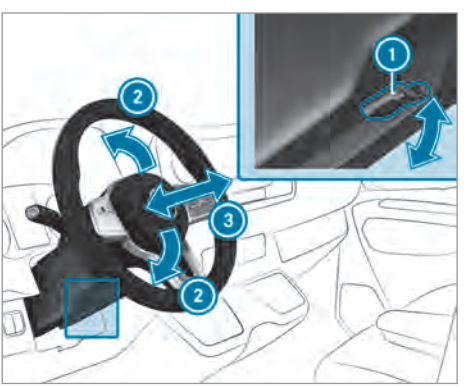

1 Lever
2 Steering column height
3 Steering column fore-and-aft adjustment

▶ **To adjust the steering wheel:** swing lever 1 down as far as it will go.
The steering wheel is unlocked.

- Move the steering wheel to the desired position.
- Pull lever ① up as far as it will go.
  The steering wheel is locked.

Stowage areas

Notes on loading guidelines

DANGER Risk of poisoning from exhaust gases

Combustion engines emit poisonous exhaust gases, such as carbon monoxide. Exhaust gases can enter the vehicle interior if the rear-end door is open when the engine is running, especially if the vehicle is in motion.

- Always switch off the engine before opening the rear-end door.
- Never drive with the rear-end door open.

WARNING Risk of injury from unsecured objects in the vehicle

When objects are unsecured or inadequately secured, they can slip, tip over or be thrown about, striking vehicle occupants.

This also applies to:

- Luggage or loads
- Seats which have been removed and are being transported in the vehicle in an exceptional case

There is a risk of injury, particularly in the event of braking maneuvers or abrupt changes in direction.

- Always stow objects in such a way that they cannot be tossed about.
- Before traveling, secure objects, luggage or load to prevent them slipping or tipping over.
- When a seat is removed, keep it preferably outside the vehicle.

WARNING Risk of injury due to objects being stowed incorrectly

If you do not adequately stow objects in the vehicle interior, they could slip or be tossed around and thereby strike vehicle occupants. In addition, cup holders, open stowage spaces and mobile phone brackets cannot always restrain the objects they contain in the event of an accident.

There is a risk of injury, particularly in the event of sudden braking or a sudden change in direction.

- Always stow objects in such a way that they cannot be tossed about in these or similar situations.
- Always make sure that objects do not project from stowage spaces, parcel nets or stowage nets.
- Close the lockable stowage spaces before starting a journey.
- Stow and secure objects that are heavy, hard, pointed, sharp-edged, fragile or too large in the cargo compartment.

WARNING Risk of burning from the tailpipe or tailpipe trim

The tailpipe and tailpipe trim can become very hot. If you come into contact with these car parts, you could burn yourself.

- Always be particularly careful when in the vicinity of the tailpipe and tailpipe trims and supervise children very closely when in this area.
- Before any contact, allow the car parts to cool down.

If you are using a roof rack, please note the maximum roof load and the maximum load capacity of the roof rack.

You will find information about the maximum roof load in the "Technical data" chapter and information about roof racks in the "Carrier systems" section .

Camera-based driving systems and the sensor functions of the inside rearview mirror may be impaired if you are transporting a load on the roof and it protrudes more than 16 in (40 cm) over the edge of the roof. Therefore, make sure that the load does not overhang by more than 16 in (40 cm).

The handling characteristics of your vehicle are dependent on the load distribution. Therefore, please observe the following notes when loading:

- when transporting a load, never exceed the permissible gross mass or the gross axle weight rating for the vehicle (including occu-

pants). The values are specified on the vehicle identification plate on the B-pillar.

- the load must not protrude above the upper edge of the seat backrests.
- if possible, always transport the load in the cargo compartment.
- fasten the load to the tie-down eyes and spread the load as evenly as possible.
- use tie-down eyes and fastening components which are suitable for the weight and size of the load.

Overview of the front stowage compartments

Overview of the front stowage compartments
Observe the notes on loading the vehicle (→ page 72).

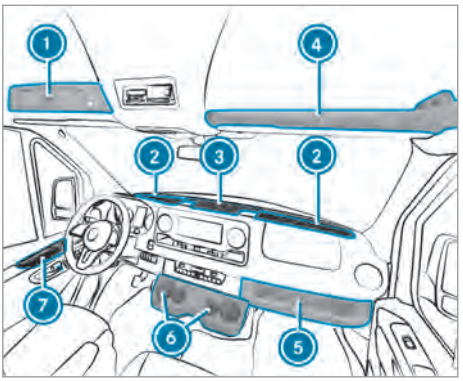

1. Lockable compartment above windshield (→ page 73)
2. Windshield stowage compartment with two cup holders/ashtray stowage space
   Stowage compartment with cover, depending on specification (→ page 73)
3. Center console stowage compartment with USB connection, charging interface, NFC interface and 12-V socket
4. Stowage compartment above windshield (subject to a maximum load of 5 lb (2.5 kg))
5. Front-passenger stowage compartment (subject to a maximum load of 11 lb (5 kg))
6. Cup holder
7. Stowage compartment in the doors

Opening and closing the center console/windshield stowage compartment

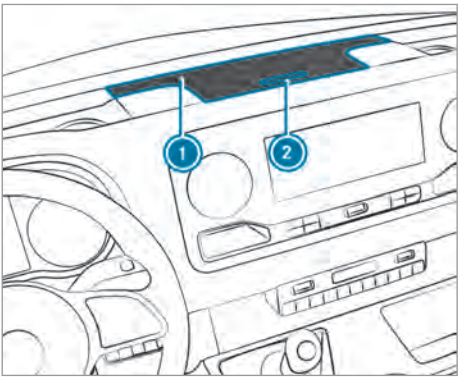

Stowage compartment cover (example: center console)

▶ **To open:** press button 2 on stowage compartment 1.
The cover folds upwards.

▶ **To close:** fold the cover downwards.

ⓘ The windshield stowage compartments have a cover, depending on the specification.

Opening and closing the lockable compartment above the windshield
You can lock and unlock the stowage compartment with the emergency key (→ page 42).

Opening

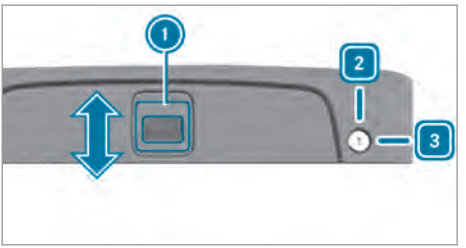

▶ **To unlock:** turn the emergency key clockwise to position 3.

▶ Slide handle 1 upwards in the direction of the arrow.

▶ Swivel the cover upwards.

Closing

▶ Fold the cover downwards and slide handle 1 downwards in the direction of the arrow.

▶ **To lock:** turn the emergency key counter-clockwise to position 2.

Opening the eyeglasses compartment

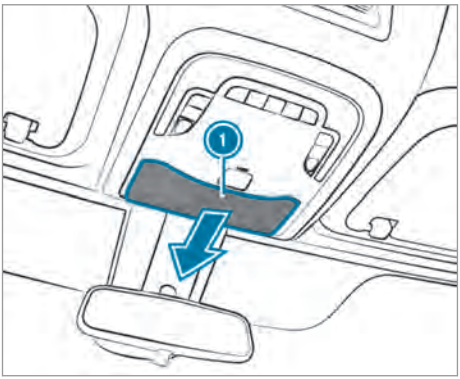

▶ Press button 1.

Bottle holder

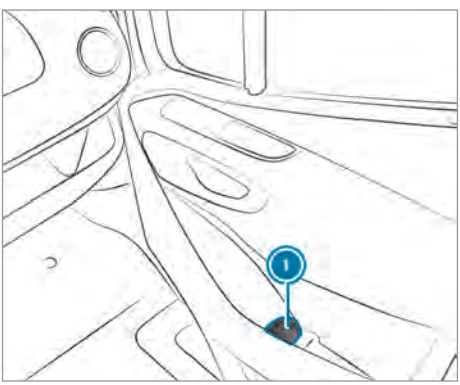

1 Bottle holder in the front doors (example: co-driver's door)

Cup holder

Opening the cup holder in the rear passenger compartment

⚠ **WARNING** Risk of injury when getting out, due to extended cup holder

If the cup holder in the rear passenger compartment is extended when you are getting out, you may bump into it.

▶ Before getting out, slide the cup holder back under the rear bench seat.

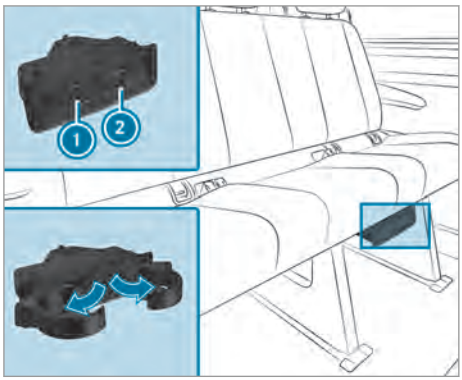

▶ **To open:** press cup holder 1 or 2.

▶ Fold out the cup holder.

▶ **To close:** slide cup holder 1 or 2 back in until it engages.

Ashtray and cigarette lighter

Using ashtrays

While driving

▶ Place the closed ashtray in a cup holder in the windshield stowage compartments while driving.

▶ Check that the ashtray is seated securely.

ⓘ Do not place the ashtray in the center console cup holders. It cannot sit securely here.

Opening

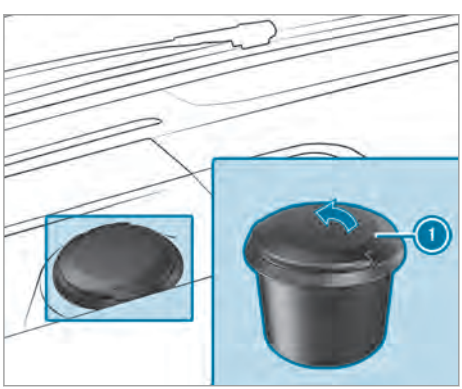

▶ Fold cover 1 upwards.

Using the cigarette lighter in the center console

WARNING - Risk of fire and injury from hot cigarette lighter

You can burn yourself if you touch the hot heating element or the socket of the cigarette lighter.

In addition, flammable materials may ignite if:

- you drop the hot cigarette lighter
- a child holds the hot cigarette lighter to objects, for example

▶ Always hold the cigarette lighter by the knob.

▶ Always make sure that the cigarette lighter is out of reach of children.

▶ Never leave children unattended in the vehicle.

Requirements:

- The ignition is switched on

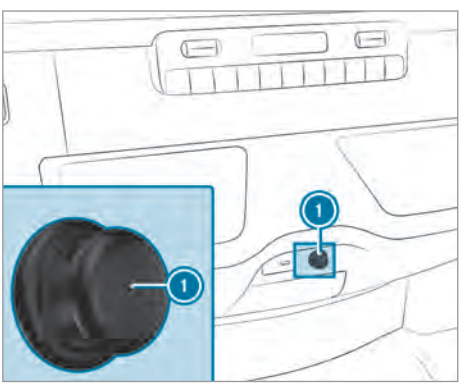

▶ Press in cigarette lighter 1.
The cigarette lighter will pop out when the heating element is red-hot.

Sockets

Using 12 V sockets in the center console

Requirements:

- Only devices with a maximum power consumption of 180 W (15 A) may be connected.

12 V socket in stowage compartment

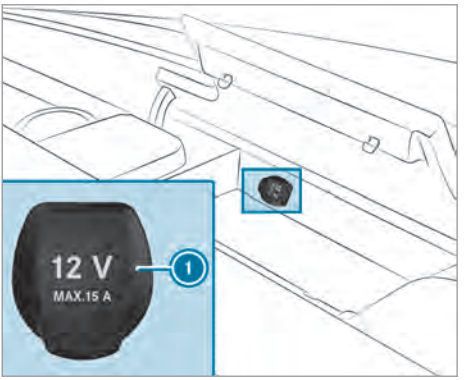

▶ Open the lid of the stowage compartment in the center console (→ page 73).

▶ Fold up cover 1 of the socket.

▶ Insert the plug of the device.

12 V socket in lower control panel

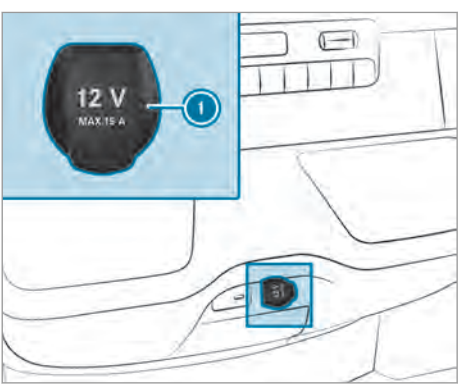

▶ Lift up cover 1 of the socket.

▶ Insert the plug of the device.

Using 12 V socket on the driver's seat

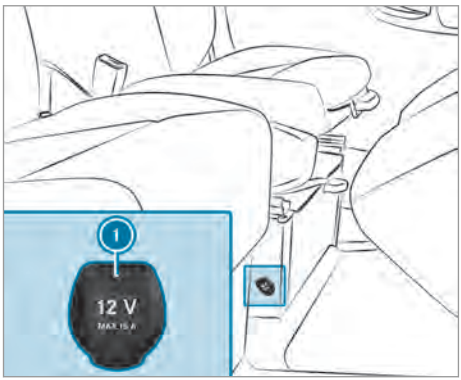

▶ Fold up cover ① of the socket.

▶ Insert the plug of the device.

Using the 115 V socket in the lower control panel

⚠ **DANGER** Risk of fatal injury due to damaged connecting cables or sockets

If a suitable device is connected, the 115 V socket will be carrying a high voltage. If the connecting cable or the 115 V socket is pulled out of the trim or is damaged or wet, you could receive an electric shock.

▶ Only use dry and damage-free connecting cables.

▶ When the ignition is switched off, ensure that the 115 V socket is dry.

▶ If the 115 V socket is damaged or gets pulled out of the paneling, immediately have the socket checked or replaced at a qualified specialized workshop.

▶ Never plug the connecting cable into a 115 V socket that is damaged or has been pulled out of the trim.

⚠ **DANGER** Risk of fatal injury due to incorrect handling of the socket

You could receive an electric shock:

- if you reach into the socket.
- if you insert unsuitable devices or objects into the socket.

▶ Do not reach into the socket.

▶ Only connect suitable devices to the socket.

Requirements:

- The devices must be equipped with a suitable plug which conforms to the standards specific to the country you are in.
- Only devices up to a maximum of 150 watts are permitted.
- Do not use multiple socket outlets.

▶ Open flap ③.

▶ Insert the plug of the device into 115 V socket ①.
When the on-board electrical system voltage is sufficient, indicator lamp ② lights up.

If you will not be using the 115 V power socket, keep the flap closed.

Using sockets in the cargo compartment

Requirements:

- Only devices with a maximum power consumption of 180 W (15 A) may be connected.

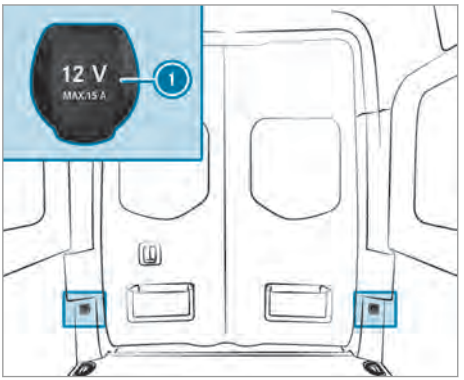

- Fold up cover (1) of the socket.
- Insert the plug of the device.

Charging a mobile phone using the USB socket in the rear passenger compartment

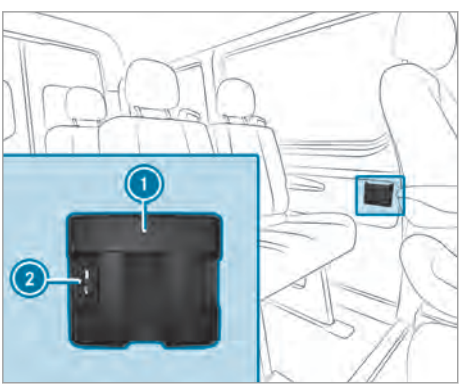

- Place the mobile phone in stowage compartment (1) and connect it to USB socket (2) to charge.

Wirelessly charging the mobile phone and coupling with the exterior antenna

Notes on wirelessly charging the mobile phone

WARNING Risk of injury due to objects being stowed incorrectly

If you do not adequately stow objects in the vehicle interior, they could slip or be tossed around and thereby strike vehicle occupants. In addition, cup holders, open stowage spaces and mobile phone brackets cannot always restrain the objects they contain in the event of an accident.

There is a risk of injury, particularly in the event of sudden braking or a sudden change in direction.

- Always stow objects in such a way that they cannot be tossed about in these or similar situations.
- Always make sure that objects do not project from stowage spaces, parcel nets or stowage nets.
- Close the lockable stowage spaces before starting a journey.
- Stow and secure objects that are heavy, hard, pointed, sharp-edged, fragile or too large in the cargo compartment.

Comply with the instructions for loading the vehicle.

WARNING Risk of fire from placing objects in the mobile phone stowage compartment

If you place objects in the mobile phone stowage compartment, they may heat up excessively and even catch fire.

- Do not place additional objects, especially those mode of metal, in the mobile phone stowage compartment.

NOTE Damage to objects caused by placing them in the mobile phone stowage compartment

If objects are placed in the mobile phone stowage compartment, they may be damaged by electromagnetic fields.

- Do not place credit cards, storage media or other objects sensitive to electromagnetic fields in the mobile phone stowage compartment.

NOTE Damage to the mobile phone stowage compartment caused by liquids

If liquids enter the mobile phone stowage compartment, the compartment may be damaged.

- Ensure that no liquids enter the mobile phone stowage compartment.

Observe the following notes on wireless charging:

- The charging function is only available when the ignition is switched on.
- In some cases, it may not be possible to charge small mobile phones at every position of the mobile phone receptacle.
- It may not be possible to charge large mobile phones that do not rest in the mobile phone receptacle.
- The mobile phone can warm up during the charging process. This depends on the applications (apps) currently running.
- For more efficient charging, the protective case should be removed from the mobile phone. Protective cases designed for wireless charging are an exception.
- When charging, the mat should be used if possible.

Charging the mobile phone in the front wirelessly

Requirements:

- The mobile phone must be suitable for wireless charging. A list of compatible mobile phones can be found at:

  http://www.mercedes-benz.com/connect

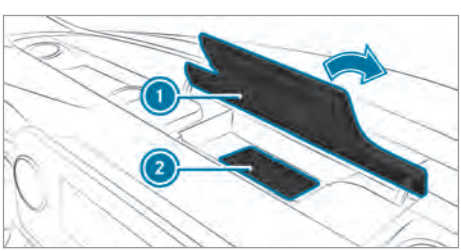

▶ Open the flap of stowage compartment ① above the media display.

▶ Place the mobile phone as centrally as possible with the display facing upwards on the marked surface of mat ②.
When the charging symbol is shown in the multimedia system, the mobile phone is being charged.

Malfunctions during charging are shown in the multimedia system display.

ⓘ The mat can be removed for cleaning, e.g. with clean, lukewarm water.

Installing or removing the floor mats

⚠ **WARNING** Risk of accident due to objects in the driver's footwell

Objects in the driver's footwell may impede pedal travel or block a depressed pedal.

This jeopardizes the operating and road safety of the vehicle.

▶ Stow all objects in the vehicle securely so that they cannot get into the driver's footwell.

▶ Always install the floor mats securely and as prescribed in order to ensure that there is always sufficient room for the pedals.

▶ Do not use loose floor mats and do not place floor mats on top of one another.

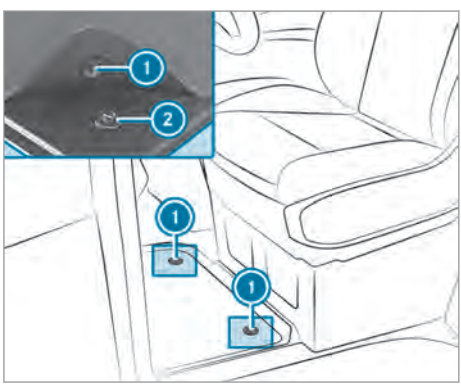

▶ **To install:** press pushbuttons ① onto holders ②.

▶ **To remove:** pull the floor mats off holders ②.

Exterior lighting

Notes on changing the lights when driving abroad

Vehicles with halogen or static LED headlamps: Changing the headlamps is not necessary. The legal requirements will also be fulfilled in countries with left and right-hand traffic.

Information about lighting systems and your responsibility

The vehicle's various lighting systems are only aids. The vehicle driver is responsible for adjusting the vehicle's lighting to the prevailing light, visibility, statutory conditions and traffic conditions.

Light switch

Operating the light switch

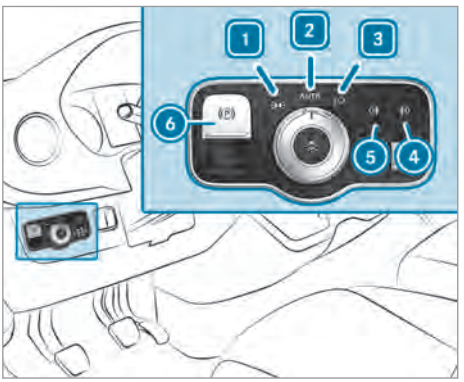

- 1 Activates or deactivates parking light, license plate and instrument lighting.
- 2 AUTO Activates or deactivates automatic headlamps/daytime running lights (preferred light switch position).
- 3 Activates or deactivates low beam/high beam.
- 4 Activates or deactivates fog light.
- 5 Activates or deactivates rear fog lights.
- 6 Applies and releases the electric parking brake(→ page 134)

ⓘ If you hear a warning tone when exiting the vehicle, the light may still be on.

ⓘ The turn signal indicator, the high beam and the high-beam flasher are operated with the combination switch (→ page 80).

ⓘ Leaving the parking lamps on for several hours drains the battery.
If the battery charge is very low, the parking light will switch off automatically to enable the next vehicle start.

Automatic driving lights function

⚠ **WARNING** Risk of accident when the low beam is switched off in poor visibility

When the light switch is set to AUTO, the low beam may not be switched on automatically if there is fog, snow or other causes of poor visibility such as spray.

- In such cases, turn the light switch to .

The automatic low beam is only an aid. Responsibility for vehicle lighting rests with you.
Turn the light switch from AUTO to immediately in the event of fog, snow or spray. Otherwise, the low beam is temporarily interrupted.

Switching the automatic low beam on:

- Turn the light switch to the AUTO position. Switch the voltage supply on: the parking light automatically switches on or off depending on the surrounding brightness.

  The daytime running lamps are switched on when the engine is running. The parking light and the low beam also switch on or off depending on the surrounding brightness.

  When the low beam is switched on, the indicator lamp on the instrument cluster switches on.

Switching fog light and rear fog light on or off

Requirements:
- The light switch is in the or AUTO position.
- The voltage supply or engine is on.

- **Switching the fog light on or off:** press button 7.
- **Switching the rear fog light on or off:** press button 6.

Comply with the country-specific regulations for using the rear fog light.

Operating the combination light switch

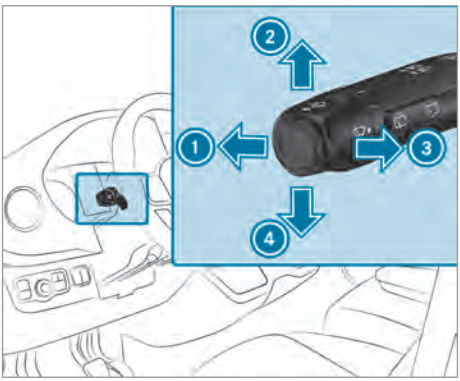

1 High beam
2 Right indicator
3 High-beam flasher
4 Left turn signal

▶ **To indicate:** push the combination switch in required direction 2 or 4 until it engages. In the case of larger steering movements, the combination switch automatically switches back.

▶ **To indicate briefly:** tap the combination switch briefly in required direction 2 or 4. The corresponding turn signal light flashes three times.

▶ **To switch on the high beam:** switch on the low beam (→ page 79).

▶ Press the combination switch forwards 1. The [≡D] indicator lamp on the instrument cluster will light up. The combination switch will return to its starting position.

ⓘ The high beam switches to position [AUTO] only in darkness and when the engine is running.

▶ **To switch off the high beam:** push combination switch 1 forwards or briefly pull it in the direction of arrow 3 (the high-beam flasher switches the high beam off).
The [≡D] indicator lamp on the instrument cluster will go out. The combination switch will return to its starting position.

ⓘ **Vehicles with Highbeam Assist:** when Highbeam Assist is active, it controls the activation and deactivation of the high beam (→ page 81).

▶ **To activate the high-beam flasher:** switch on the power supply or ignition.

▶ Briefly pull the combination switch in the direction of arrow 3.

Switching hazard warning lights on or off

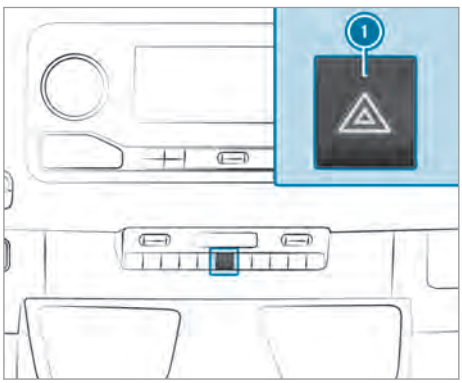

▶ **To switch on and off:** press button 1.

If you operate a turn signal indicator while the hazard warning lights are switched on, only the turn signal indicator on the relevant side of the vehicle lights up.

If the hazard warning lights have automatically switched on, press the hazard warning lamp switch 1 to switch them off.

ⓘ The hazard warning lights work even when the ignition is switched off.

Cornering light function

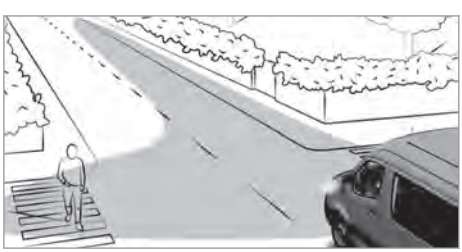

Cornering light improves the illumination of the road over a wide angle in the turning direction, enabling better visibility in tight bends, for example.

The function is active under the following conditions:

- The speed is less than 37 mph (60 km/h) and the indicator has been switched on or the steering wheel is turned.
- The speed is between 37 mph (60 km/h) and 50 mph (80 km/h) and the steering wheel is turned.

The cornering light may still light up for a short time but is switched off automatically after a maximum of three minutes.

ⓘ When reverse gear is engaged, the lighting switches to the opposite side.

Highbeam Assist

Adaptive Highbeam Assist function

⚠ **WARNING** Risk of accident despite Adaptive Highbeam Assist

Adaptive Highbeam Assist does not recognize the following road users:

- Road users without lights, e.g. pedestrians
- Road users with poor lighting, e.g. cyclists
- Road users whose lighting is obstructed, e.g. by a barrier

On very rare occasions, Adaptive Highbeam Assist may fail to recognize other road users with their own lighting, or may recognize them too late.

In these or similar situations, the automatic high beam is not deactivated or is activated despite the presence of other road users.

▶ Always observe the traffic carefully and switch off the high beam in good time.

The Adaptive Highbeam Assist automatically switches between the following settings:

- Low beam
- High beam

The system detects that vehicle lights are approaching in the opposite direction or driving ahead of the vehicle.

At speeds greater than 19 mph (30 km/h), a change is made to the following setting:

- If no other road users are detected, the high beam switches on automatically.

At speeds less than 16 mph (25 km/h) or if there is sufficient road lighting, a change is made to the following setting:

- The high beam automatically switches off.

System limitations

Adaptive Highbeam Assist cannot take the road, weather or traffic conditions into consideration.

The detection of obstacles can be restricted if:

- Visibility is impaired, e.g. in fog, heavy rain or snow
- The sensors are dirty or covered

Adaptive Highbeam Assist is only an aid. You are responsible for ensuring correct vehicle lighting in accordance with the prevailing light, visibility and traffic conditions.

The system's optical sensor is located behind the windshield near the overhead control panel.

Switching Highbeam Assist on or off

▶ **To switch on:** turn the light switch to the AUTO position.

▶ Switch the highbeam on using the combination switch.
If the highbeam is automatically switched on in darkness, the indicator lamp on the multifunction display lights up.

▶ **To switch off:** switch off the highbeam using the combination switch.

Adjusting the interior lighting

Adjusting the front interior lighting

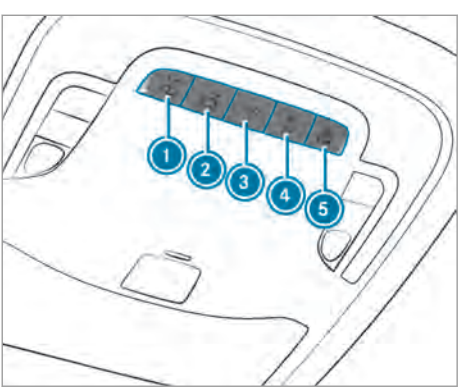

Variant 1

- ① Switches front left reading lamp on or off
- ② Switches the automatic interior lighting control on or off
- ③ Switches front interior lighting on or off
- ④ Switches rear compartment/cargo compartment lamp on or off
- ⑤ Switches front right reading lamp on or off

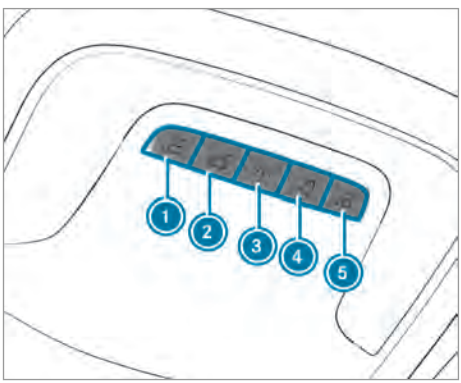

Variant 2

- ① Switches front left reading lamp on or off
- ② Switches the automatic interior lighting control on or off
- ③ Switches front interior lighting on or off
- ④ Switches rear compartment/cargo compartment lamp on or off
- ⑤ Switches front right reading lamp on or off

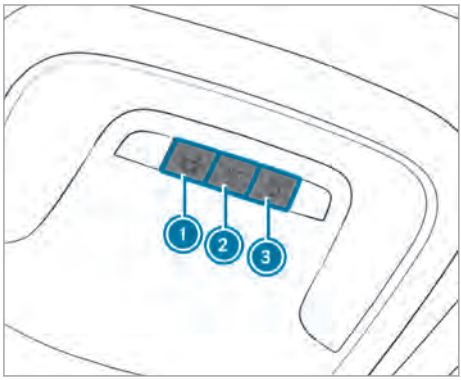

Variant 3

- ① Switches the automatic interior lighting control on or off
- ② Switches front interior lighting on or off
- ③ Switches rear compartment/cargo compartment lamp on or off

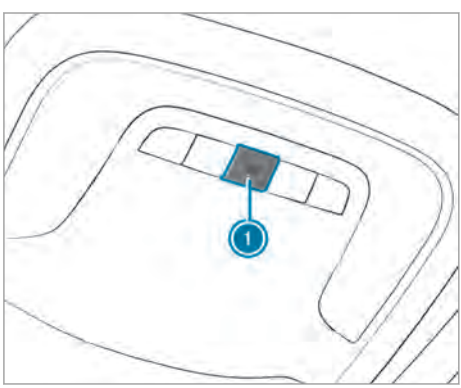

Variant 4

- ① Activates/deactivates interior lighting

Rear interior lighting

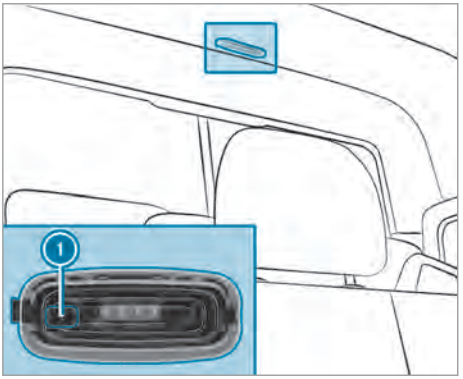

▶ ① Switches rear compartment/cargo compartment lamp on or off

Motion detector

⚠ **WARNING** Risk of injury by laser beam from motion detector

The motion detector transmits invisible radiation from LEDs (light-emitting diodes).

These LEDs are classified under the 1M laser class and can cause retina damage in the following situations:

- If you look directly into the unfiltered laser beam from the motion detector for an extended period
- If you look directly into the laser beam of the motion detector with optical instruments such as eyeglasses or a magnifying glass.

▶ Never look directly into the laser beam.

The motion detector is located in the cargo compartment behind the partition, in the middle of the roof.

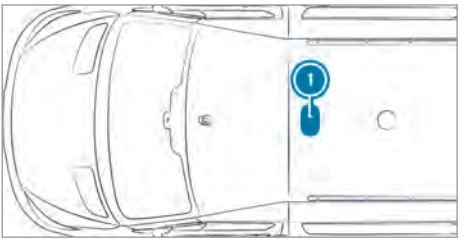

① Position of motion detector

If the vehicle is equipped with a motion detector, the cargo compartment lighting is also activated via the motion detector.

If the motion detector detects movement in the cargo compartment while the vehicle is stationary, the cargo compartment lighting switches on for approximately two minutes.

The cargo compartment lighting can be switched on via the motion detector if:

- The vehicle is stationary, the parking brake is applied and the brake pedal is not being depressed.
- **Vehicles with automatic transmission:** the selector lever is in position P and you are not depressing the brake pedal.
- The vehicle has not been locked from the outside using the key.

If no change to the vehicle, such as a door opening, is detected over several hours, the motion detector will automatically switch off. This prevents the battery from discharging.

Changing bulbs

Instructions for changing bulbs

⚠ **WARNING** Risk of burns from hot component parts whilst replacing a bulb

Bulbs, lamps and plug connectors can become very hot during operation.

When replacing a bulb, you could burn yourself on these component parts.

▶ Allow the component parts to cool down before replacing the bulbs.

When you are replacing the light bulb, observe the following:

- Do not use any bulb that has been dropped or has scratches on its glass tube. Otherwise, the bulb may explode.
- The bulb may explode if it is hot or if you touch, drop or scratch it.
- Stains on the glass tube reduce the bulb's service life. Do not touch the glass tube with your bare hands. If necessary, clean the glass tube with alcohol or spirits in a cold state and wipe it down with a lint-free cloth.
- Protect bulbs from humidity and do not bring them into contact with liquids.

Always ensure the bulbs are firmly secured.

If your vehicle is equipped with LED lamps, you can check this as follows: the light cone will move from top to bottom and back again when the engine starts. For this to work, the low beam needs to have been switched on before the engine is started.

Bulbs and lights are a major part of vehicle safety. Therefore, ensure that they are always working. Have the headlamp setting checked regularly.

- Before changing the lamps, switch off the vehicle's lighting system. This will prevent a short circuit.
- Use bulbs only in closed lights that have been designed for them.
- Use only spare bulbs of the same type and with the correct voltage.

If the new bulb also does not light up, consult a qualified specialist workshop.

Replacing front light bulbs (vehicles with halogen headlamps)

Overview of front bulb types

You can change the following bulbs.

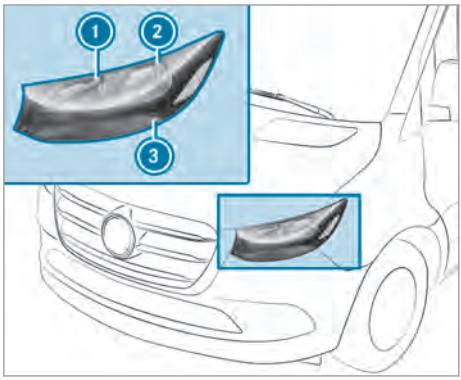

Halogen headlamps

1. High beam/daytime running lamps: H15 55 W/15 W
2. Low beam/perimeter light: H7 55 W/W 5 W
3. Turn signal: 3457 NAK 28 W

Changing the halogen headlamps

Requirements:

- **Low beam:** light bulb type H7 55 W
- **High beam/daytime running lights:** light bulb type H15 55 W/15 W
- **Perimeter lights:** light bulb type W 5 W
- **Turn signal indicators:** bulb type 3457 NAK 28 W

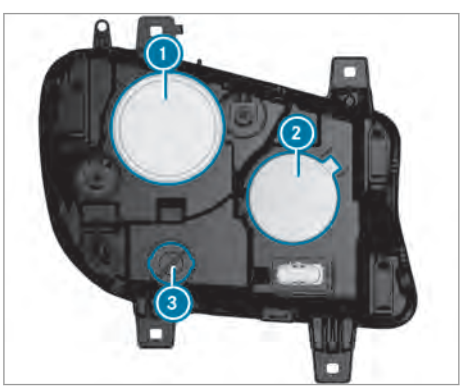

1. Low beam/perimeter lights housing cover
2. High beam/daytime running lights housing cover
3. Indicator socket

▶ Switch off the lighting system.

- **Low beam/perimeter lights:** pull back housing cover ①.
- Pull out the socket towards the rear.
- Remove the bulb from the socket.
- Insert the new bulb into the socket such that the base of the bulb rests fully against the base of the socket.
- Align and insert the socket.
- Attach housing cover ①.
- **High beam/daytime running lights:** pull back housing cover ②.
- Turn the socket counter-clockwise and pull it out.
- Remove the bulb from the socket.
- Insert the new bulb into the socket such that the base of the bulb rests fully against the base of the socket.
- Insert the socket and turn it clockwise.
- Attach housing cover ②.
- **Turn signal indicator:**
- Turn socket ③ counter-clockwise and remove it.
- Gently turn the bulb counter-clockwise and take it out of the socket.
- Insert the new bulb into the socket and turn it clockwise.
- Insert socket ③ and turn it clockwise.

Additional turn signal light

Requirements:
- **Additional turn signal light (all-wheel drive vehicles):** bulb type P 21 W

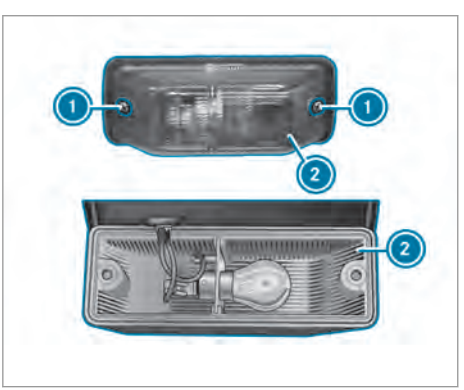

- Switching off the lighting system.
- Unscrew screws ① and remove lens ②.
- Gently turn the bulb counter-clockwise and take it out of the socket.
- Insert the new bulb into the socket and turn it clockwise.
- Place lens ② in position and tighten the screws ①.

Replacing rear light bulbs (Cargo Van and Passenger Van)

Overview of rear bulb types (Cargo Van and Passenger Van)
You can change the following bulbs.

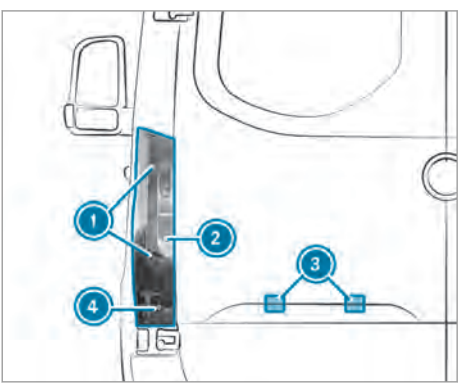

Vehicles with standard tail lamps
① Brake lights/tail lamps/perimeter lights: P 21 W
② Reversing lights: P 21 W
③ License plate lamp: W 5 W
④ Rear fog lights: P 21 W

You can change the following bulbs.

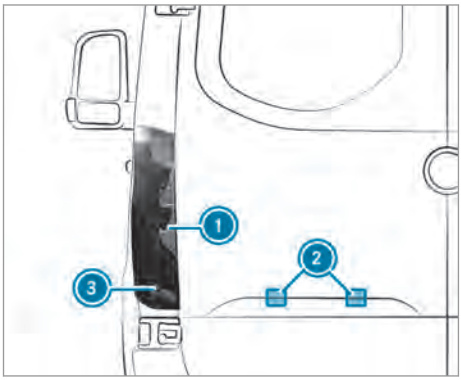

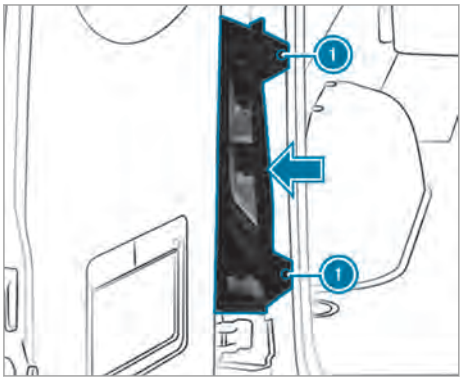

Vehicles with partial LED tail lamps

1. Reversing lights: P 21 W
2. License plate lamp: W 5 W
3. Rear fog lights: P 21 W

Tail lamps (Cargo Van and Passenger Van)

Requirements:

- **Brake lights/tail lamps/perimeter lights:** light bulb type P 21 W
- **Reversing lights:** bulb type P 21 W
- **Rear fog lights:** bulb type P 21 W

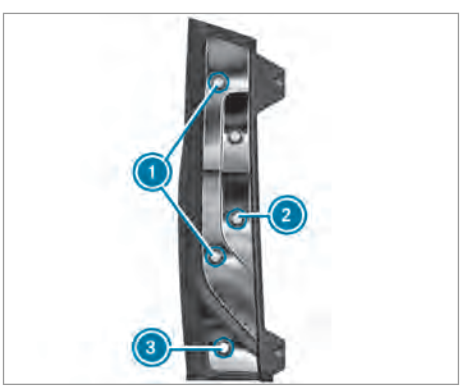

1. Brake lights/tail lamps/perimeter lights
2. Reversing light
3. Rear fog light

▶ Switch off the lighting system.

▶ Open the rear door.

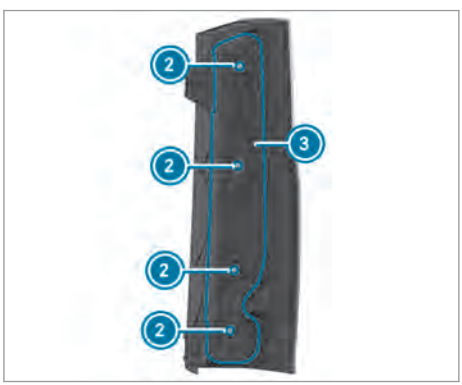

▶ **To remove:** loosen screws 1 and pull out the tail lamps in the direction of the arrow.

▶ Remove the connector from bulb mount 3.

▶ Loosen screws 2 and remove bulb mount 3 from the tail lamp.

▶ Gently turn the bulb counter-clockwise and take it out of the socket.

▶ Insert the new bulb into the socket and turn it clockwise.

▶ **To install:** set bulb mount 3 on the tail lamp and screw in screws 2.

▶ Press the connector into bulb mount 3.

▶ Insert the tail lamp and screw in screws 1.

License plate lamp

Requirements:

- **License plate lamp:** light bulb type W 5 W

- Switch off the lighting system.
- Place a screwdriver, for example, at opening ② between lamp ③ and panel ① and carefully pry off lamp ③.
- Remove lamp ③ from panel ①.
- Rotate the bulb holder by around 45° and detach it from the lamp.
- Remove the light bulb.
- Insert the new bulb into the bulb holder.
- Insert the bulb holder into the lamp and rotate it by around 45°.
- Insert the lamp into the panel opening until it engages.

Replacing rear light bulbs (chassis)

Overview of rear bulb types (chassis)
You can change the following bulbs.

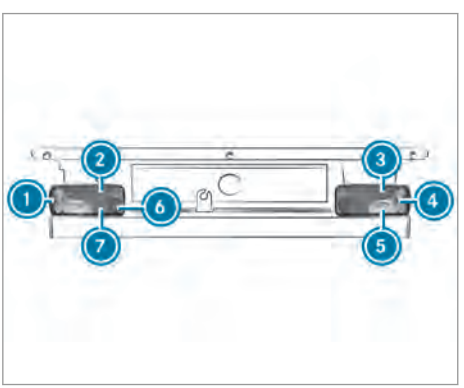

Vehicles with standard tail lamps

① Clearance lamp: R 5 W
② Tail light: R 5 W
③ Brake light: P 21 W
④ Turn signals: PY 21 W
⑤ Reversing lights: P 21 W
⑥ Rear fog light (driver's side): P 21 W
⑦ License plate lamp: R 5 W

Replacing the tail lamps on the chassis

Requirements:

- **Rear fog lights:** bulb type P 21 W
- **License plate lighting:** bulb type R 5 W
- **Reversing lights:** bulb type P 21 W
- **Turn signal indicators:** bulb type PY 21 W
- **Clearance lamp:** bulb type R 5 W
- **Brake light:** bulb type P 21 W
- **Taillight:** bulb type R 5 W

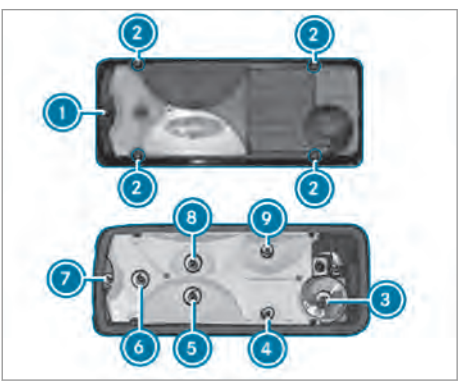

① Light lens
② Screws
③ Rear fog light
④ License plate lamp
⑤ Reversing light
⑥ Turn signal indicator
⑦ Clearance lamp
⑧ Brake light
⑨ Taillight

- Switch off the lighting system.
- Unscrew screws ① and remove light lens ②.
- Remove the plug connector from the lamp carrier.
- Gently turn the bulb counter-clockwise and take it out of the socket.
- Insert the new bulb into the socket and turn it clockwise.
- Position light lens ② and tighten screws ①.

Replacing interior light bulbs

Replacing rear interior lamps

Requirements:

ⓘ For the standard bulb failure indicator function to work correctly, only lights bulbs must be used that are the same type and power as those installed during production.

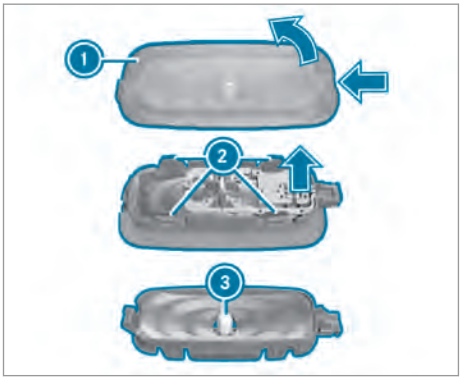

- Switch off the interior lighting.
- Press in catch spring of lens ① with a suitable object e.g. a screwdriver, and then lever off the lens with the lamp housing.
- **To pull back lens from the lamp housing:** press the lugs of lens ② inwards.
- Remove light bulb ③ from the lamp housing.
- Insert the new light bulb.
- Insert the lens in the lamp housing until it engages.
- Place the lens with the lamp housing in position and engage it.

Windshield wipers

Switching the front windshield wipers on and off

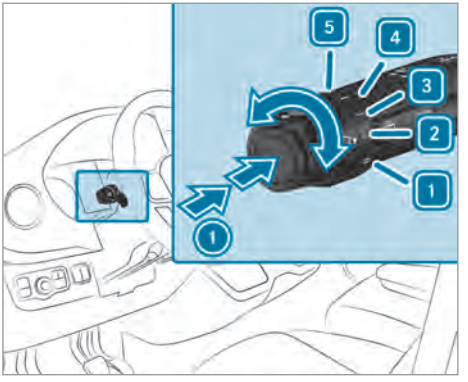

① Single wipe/wiping with washer fluid
1 0 Windshield wipers off
2 • • • Intermittent wiping, normal
Vehicles with rain sensors: automatic wiping, normal
3 • • • • Intermittent wiping, frequent
Vehicles with rain sensors: automatic wiping, frequent
4 — Continuous wiping, slow
5 = Continuous wiping, fast

- Turn the combination switch to the corresponding position 1 – 5.
- **Single wipe/washing:** press the button on the combination switch in the direction of arrow ①.
  - Single wipe
  - Wipes with washer fluid

Switching the rear window wiper on/off

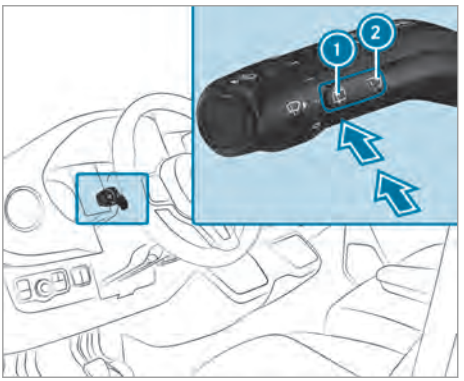

① Single wipe/wash
② Intermittent wiping

- **Single wipe:** press button ① to the point of resistance.
- **Wiping with washer fluid:** press button ① beyond the point of resistance.
- **To switch intermittent wiping on or off:** press button ②.
  If the rear window wiper is switched on, the symbol will appear on the Instrument Display.

Replacing the windshield wiper blades

WARNING Risk of becoming trapped if the windshield wipers are switched on while wiper blades are being replaced

If the windshield wipers begin to move while you are changing the wiper blades, you can be trapped by the wiper arm.

- Always switch off the windshield wipers and the ignition before changing the wiper blades.

WARNING Risk of injury from using the windshield wipers while the engine hood is open

When the engine hood is open and the windshield wipers are set in motion, you can be trapped by the wiper linkage.

- Always switch off the windshield wipers and ignition before opening the engine hood.

ⓘ If the wiper blades are worn out, they will not wipe the windshield properly. Replace the wiper blades twice a year, preferably in spring and fall.

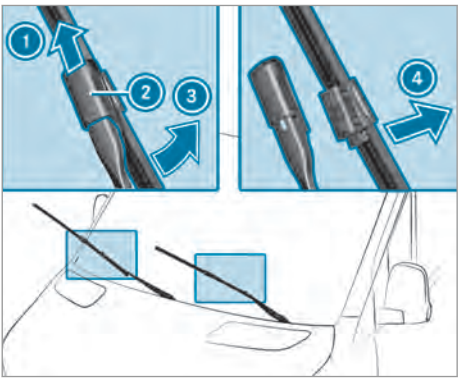

- Fold wiper arm ③ away from the windshield.
- Hold wiper arm ③ and turn the wiper blade away from wiper arm ③ in the direction of the arrow as far as it will go.
- Slide catch ② upwards in the direction of the arrow until it engages.
- Fold back the wiper blade onto the wiper arm.
- Remove wiper blade ① from wiper arm.
- Insert new washer blade ① in the holder on wiper arm ③.

When doing so, take into account the different lengths of the wiper blades:

- Driver's side: long wiper blade
- Front-passenger side: short wiper blade

- Slide catch ② downwards until it engages.
- Fold wiper arm ③ back onto the windshield.

Replacing the windshield wiper blades (WET WIPER SYSTEM)

WARNING Risk of becoming trapped if the windshield wipers are switched on while wiper blades are being replaced

If the windshield wipers begin to move while you are changing the wiper blades, you can be trapped by the wiper arm.

- Always switch off the windshield wipers and the ignition before changing the wiper blades.

⚠ **WARNING** Risk of injury from using the windshield wipers while the engine hood is open

When the engine hood is open and the windshield wipers are set in motion, you can be trapped by the wiper linkage.

▶ Always switch off the windshield wipers and ignition before opening the engine hood.

ⓘ If the wiper blades are worn out, they will not wipe the windshield properly. Replace the wiper blades twice a year, preferably in spring and fall.

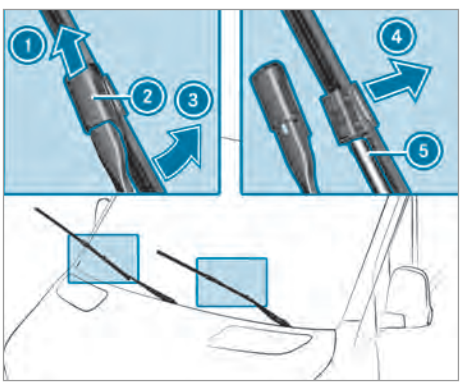

▶ Fold wiper arm ③ away from the windshield.

▶ Hold wiper arm ③ and turn the wiper blade away from wiper arm ③ in the direction of the arrow as far as it will go.

▶ Slide catch ② upwards in the direction of the arrow until it engages.

▶ Remove wiper blade ① from the wiper arm in the direction of arrow ④.

▶ Carefully remove hose ⑤ from the wiper blade.

▶ Attach hose ⑤ to the new wiper blade.

▶ Insert new washer blade ① in the holder on wiper arm ③.

When doing so, take into account the different lengths of the wiper blades:

- Driver's side: long wiper blade
- front-passenger side: short wiper blade

▶ Slide catch ② downwards until it engages.

▶ Fold back the wiper blade onto the wiper arm.

▶ Fold wiper arm ③ back onto the windshield.

Replacing the rear window wiper blade

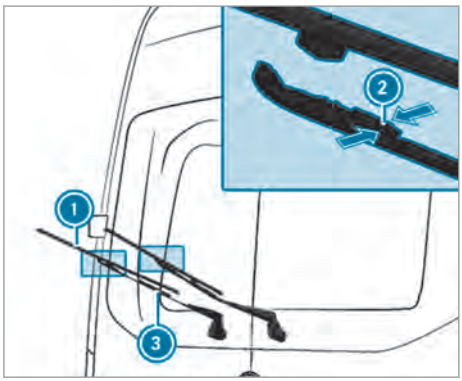

▶ Fold wiper arm ③ away from the rear window.

▶ Press both retaining clips ② in the direction of the arrow and swivel the wiper blade away from the wiper arm.

▶ Pull wiper blade ① upwards out of the holder on wiper arm ③.

▶ Insert new washer blade ① in the holder on wiper arm ③.

▶ Push new wiper blade ① onto wiper arm ③ until the retaining clips engage.

▶ Fold wiper arm ③ back onto the rear window.

Mirrors

Operating the outside mirrors

⚠ **WARNING** Risk of injury from adjusting the vehicle settings while the vehicle is in motion

You could lose control of the vehicle in the following situations:

- if you adjust the driver's seat, the head restraint, the steering wheel or the mirror while the vehicle is in motion
- if you fasten your seat belt while the vehicle is in motion

▶ Before starting the engine: adjust the driver's seat, the head restraint, the

steering wheel or the mirror and fasten your seat belt.

WARNING Risk of accident due to misjudgment of distances when using the passenger mirror

The outside mirror on the front-passenger side reflects objects on a smaller scale. The objects in view are in fact closer than they appear.

As a result, you may misjudge the distance between you and the road user driving behind you, for example, when changing lanes.

- Therefore, always look over your shoulder in order to ensure that you are aware of the actual distance between you and the road users driving behind you.

Adjusting the outside mirrors manually

- Adjust the outside mirrors to the correct position manually.
- **To engage an outside mirror that has been pushed out of position:** push the outside mirror into position manually.

Adjusting the outside mirrors electrically

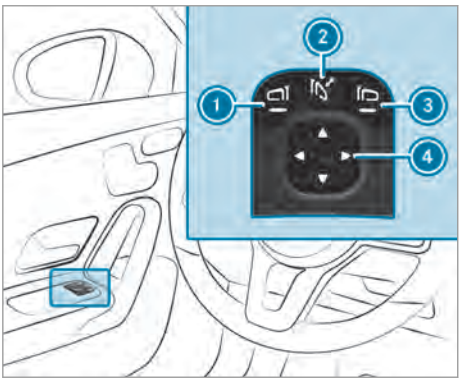

Example image

NOTE Damage to the electric outside mirrors

If you fold the electric outside mirrors in or out manually, you may damage the outside mirrors and they will not lock in place properly.

If the outside mirrors are not folded in when washing the vehicle in a car wash, the washer brushes may fold them in forcibly and damage them.

- The outside mirrors must only be folded in and out electrically.
- Fold the outside mirrors in before washing the vehicle in a car wash.

- Before driving off, switch on the power supply or the ignition.
- **To fold in or out:** briefly press button 2.
- **To adjust:** use button 1 or 3 to select the outside mirror to be adjusted.
- Set the position of the mirror glass by pressing button 4.
- **To engage an outside mirror that has been pushed out of position:** press and hold button 2.
  You will hear a click and the mirror will audibly engage in position. The outside mirror is set in the correct position.

Heating the outside mirrors

- **Vehicles without a rear window defroster:** at low temperatures, the mirror heating switches on automatically when the engine is started.
- **Vehicles with a rear window defroster:** at low temperatures, the mirror heater switches on automatically when the engine is started. The mirror heater can also be switched on together with the rear window defroster using the rear window defroster button.

Dimming the inside rearview mirror

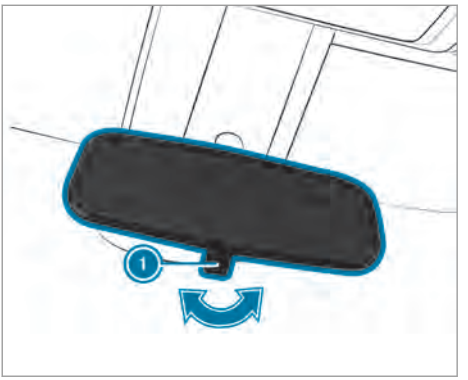

- **To dim the inside rearview mirror:** move anti-glare lever (1) in the direction of the arrow.

Using sun visors

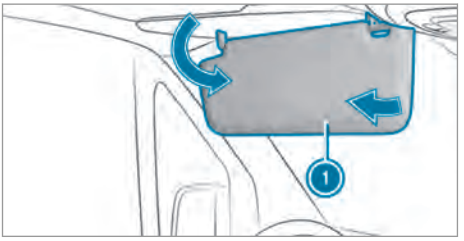

- **Glare from front:** fold sun visor (1) downwards.
- **Glare from the side:** swivel sun visor (1) to the side.

Overview of climate control systems

Heating system overview

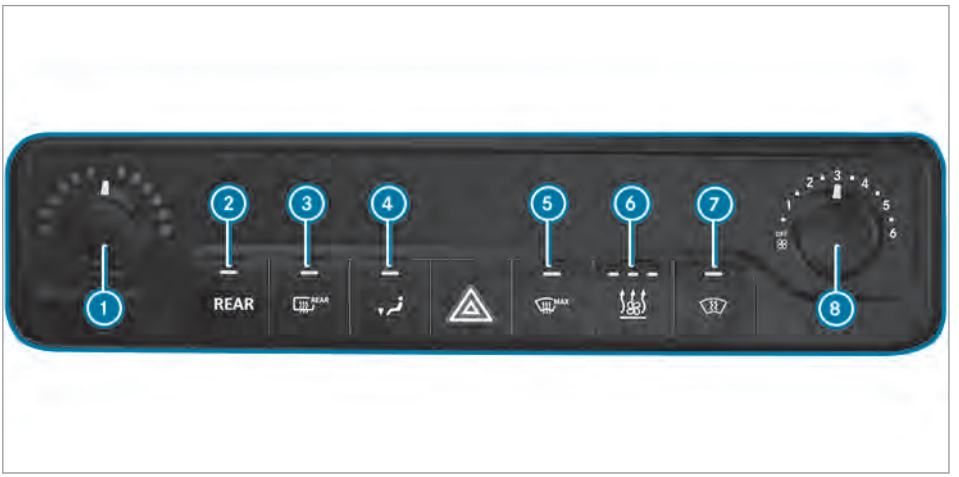

1. Sets the temperature
2. REAR / Switches the rear compartment heating on/off
3. Switches the rear window heater on/off (→ page 98)
4. Switches footwell air distribution on/off
5. Switches windshield defrosting on/off (→ page 97)
6. Vehicles with stationary heater or heater booster: switches the stationary heater or heater booster on/off (→ page 100)
7. Vehicles with windshield heating: switches windshield heating on/off (→ page 98)
8. Sets the airflow

ⓘ The indicator lamps on the buttons signal that the function in question has been activated.

TEMPMATIC overview

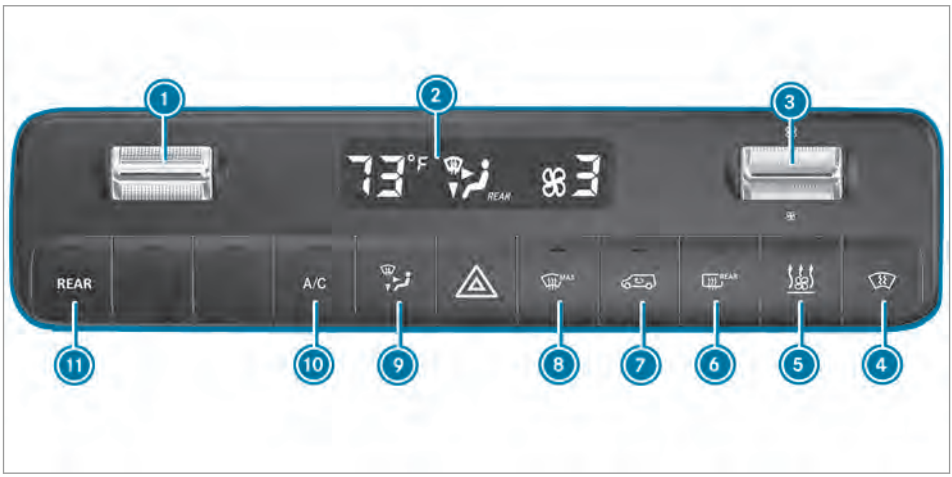

1 ▼▲ Sets the temperature

2 Display

3 Sets the airflow

4 Vehicles with windshield heating: switches windshield heating on/off (→ page 98)

5 Vehicles with stationary heater or heater booster: switches the stationary heater or heater booster on/off (→ page 100)

6 Vehicles with rear window defroster: REAR switches rear window defroster on/off (→ page 98)

7 Switches air-recirculation mode on/off (→ page 98)

8 MAX Switches windshield defrosting on/off (→ page 97)

9 Adjusts the air distribution (→ page 97)

10 A/C Switches the A/C function on/off (→ page 96)

11 REAR / Vehicles with a dual-zone climate control system: adjusts the rear compartment climate control/ rear compartment heating (indicator lamp flashes) (→ page 96)

ⓘ The indicator lamps on the buttons signal that the function in question has been activated.

3-zone automatic climate control overview

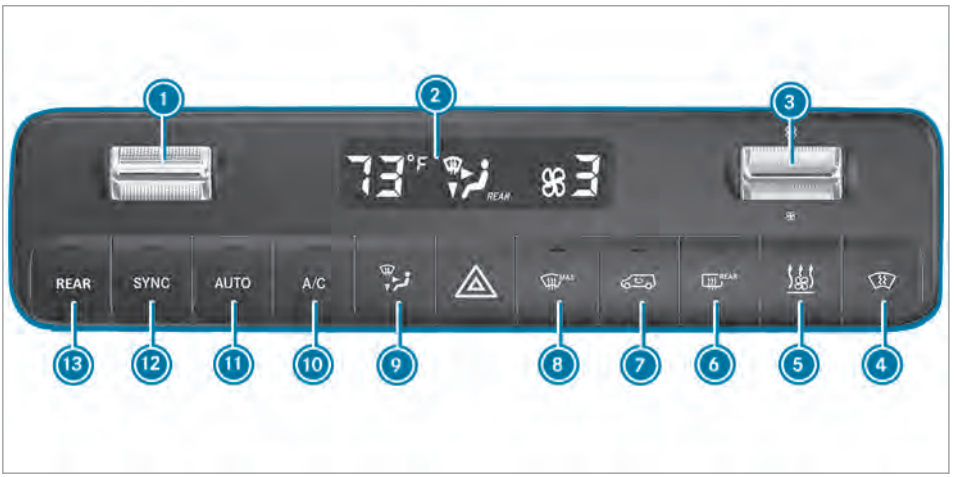

1. ▼▲ Sets the temperature
2. Display
3. Sets the airflow
4. Vehicles with windshield heating: switches windshield heating on/off (→ page 98)
5. Vehicles with stationary heater or heater booster: switches the stationary heater or heater booster on/off(→ page 100)
6. Vehicles with rear window defroster: REAR switches rear window defroster on/off (→ page 98)
7. Switches air-recirculation mode on/off (→ page 98)
8. MAX Switches windshield defrosting on/off (→ page 97)
9. Adjusts the air distribution (→ page 97)
10. A/C Switches the A/C function on/off (→ page 96)
11. AUTO Automatically controls the climate control, front (→ page 96) and rear compartment (→ page 97)
12. SYNC Switches synchronization on/off (→ page 97)
13. REAR / Vehicles with dual-zone climate control systems: adjusts the rear compartment climate control/ rear compartment heating (indicator lamp flashes) (→ page 96)

ⓘ The indicator lamps on the buttons signal that the function in question has been activated.

Operating climate control systems

Switching the climate control system on or off

▶ **To switch on:** set the airflow to 1 or higher on the front-compartment menu.

▶ **To switch off:** set the airflow to 0 or OFF on the front-compartment menu.
OFF appears on the climate control system display.

ⓘ When the climate control system is switched off, the windows may fog up more quickly. Switch the climate control system off only briefly.

ⓘ If the front-compartment system has already been switched on and the rear-compartment system has been switched off, you can switch it on by turning up the fan on the rear-compartment menu. If the front-compartment system is switched on, the rear-compartment system will automatically switch on as well.

Adjusting the rear compartment climate control

Requirements:
- The climate control system has been switched on (→ page 95).

Switching on the temperature and airflow and adjusting dual-zone and 3-zone automatic climate control

▶ Press the REAR / button.

The indicator lamp on the REAR / button and the REAR / symbol on the climate control system display will flash.

The display switches to the temperature and the blower in the rear menu.

▶ Use rocker switches ▼▲ and to set the required temperature and airflow on the rear menu.

ⓘ If there are significant differences between the temperature settings of the front and rear systems, these cannot be controlled accurately.

ⓘ If the rear compartment climate control has been switched off, you can switch it on automatically by pressing the SYNC button.

Depending on the vehicle equipment, climate control switches on the overhead air-conditioning system or rear compartment heating as required:

- **Vehicles with an overhead air-conditioning system:** the rear compartment can be cooled only.
- **Vehicles with rear compartment heating:** the rear compartment can be heated only.

Switching off rear compartment air conditioning with dual and 3-zone automatic climate control

▶ Press the REAR / button.

▶ If the indicator lamp on the REAR / button and the REAR / symbol on the climate control system display flash, set the airflow to 0 on the rear menu.

ⓘ Indicator lamp on: rear compartment climate control has been switched on.
Indicator lamp off: rear compartment climate control has been switched off.
Indicator lamp flashes: the setting mode of the rear compartment climate control is active.

Switching the A/C function on and off

Requirements:
- The climate control system has been switched on (→ page 95).

The A/C function controls the climate and dries the air inside the vehicle.

▶ Press the A/C button.

ⓘ Switch off the A/C function only briefly. Otherwise, the windows could fog up faster.

ⓘ Condensation may leak from the underside of the vehicle in cooling mode. This is not a sign of a defect.

Automatically regulating climate control

Requirements:
- The climate control system is switched on (→ page 95).

Switching on automatic climate control

In automatic mode, the temperature, airflow and air distribution are regulated and kept constant.

▶ Press the AUTO button.
The display will show the temperature. The airflow and air distribution will disappear from the display.

If the rear-compartment climate control has been switched on, the setting for the rear compartment is carried over.

Switching off automatic climate control

▶ Use the [ ] rocker switch to change the airflow setting and air distribution (→ page 97) .
The other setting remains unaffected by the change.

Automatically controlling the climate control in the rear compartment

Requirements:
- Rear-compartment climate control has been switched on (→ page 96).

In automatic mode, the temperature, airflow and air distribution are regulated and kept constant.

▶ Press the [REAR] / [ ] button.

▶ Press the [AUTO] button.

ⓘ Even if the front-compartment system is in automatic mode, the rear-compartment system can exit automatic mode if you adjust the blower on the rear-compartment menu.

ⓘ If the air is cooled and the driver, front passenger or sliding door is opened, the rear air conditioning system blower is turned down after around 15 minutes.
When all doors have been closed again, the blower will be reset to the previous setting after around one minute.

Information on the air distribution settings

The symbols on the display indicate the vents through which the air is being directed.

TEMPMATIC
- [ ] Defroster and center vents
- [ ] All vents
- [ ] Center vents
- [ ] Center and footwell vents

3-zone automatic climate control
- [ ] Defroster vents
- [ ] Defroster and center vents
- [ ] All vents
- [ ] Defroster and footwell vents
- [ ] Center vents
- [ ] Center and footwell vents
- [ ] Footwell vents

Setting the air distribution

Requirements:
- The climate control system is switched on.

▶ Press the [ ] button repeatedly until the desired air distribution appears in the air conditioning system display.

Switching the synchronization function on and off

Requirements:
- The climate control system has been switched on (→ page 95).

The synchronization function controls the climate control function centrally. The settings for the temperature and airflow in the front zone are automatically adopted for the rear zone.

▶ Press the [SYNC] button.

ⓘ If the rear-compartment climate control has been switched off, you can switch it on automatically by pressing the [SYNC] button.

Removing condensation from the windows

Misting on the inside of windows

▶ Press the [MAX] button.
When the windshield defroster is switched on, the temperature and airflow cannot be adjusted.

▶ In vehicles with a heating system and a manual air-conditioning system, also close the side and center air vent (→ page 98) as well as the air vents for the rear compartment (→ page 99).

▶ **Vehicles with dual or 3-zone automatic climate control:** press the [A/C] button and, if necessary, use the [ ] button to direct the air onto the windshield [ ].

▶ Increase the airflow as necessary and close all air vents (→ page 98).

▶ If the windows remain fogged up: press the [MAX] button.
When the windshield defroster is switched on, the temperature and airflow cannot be adjusted.

[MAX] or no symbol will appear on the climate control system display.

▶ **Vehicles with windshield heating:** press the button.

▶ Close the center air vent (→ page 98) and air vents for the headroom (→ page 99) and rear compartment (→ page 99).

Misting on the outside of windows

▶ Switch on the windshield wiper (→ page 88).

Switching air-recirculation mode on and off

▶ Press the button.
The interior air is recirculated.

The air-recirculation mode switches off automatically.

ⓘ When air-recirculation mode is switched off, the windows may fog up more quickly. Switch on air-recirculation mode only briefly.

Air-recirculation mode automatically switches on in the following cases:

- at high outside temperatures
- while the vehicle is driving in a tunnel (only vehicles with 3-zone automatic climate control)
- when the windshield wipers are switched on (→ page 88)

The indicator lamp on the button will not light up in this case. After a maximum of 30 minutes, outside air is automatically introduced again.

Switching the windshield heating on and off

ⓘ In the event of high outside temperatures, the windshield heating may not turn on.

▶ Press the button for the windshield heating.
If the indicator lamp lights up, the windshield heating is switched on.

ⓘ The windshield heating switches off automatically after a few minutes.

ⓘ If the battery voltage is too low, it may not be possible to switch the windshield heating on. If the battery voltage becomes too low while the windshield heating is in operation, the windshield heating will switch off automatically.

Switching the rear window defroster on or off

▶ Press the REAR button.
If the indicator lamp lights up, the rear window defroster is switched on.

Operating air vents

Adjusting the front-compartment air vents

⚠ **WARNING** - Danger of burns or frostbite due to being too close to the air vents

Very hot or very cold air can flow from the air vents.

This could result in burns or frostbite in the immediate vicinity of the air vents.

▶ Make sure that all vehicle occupants always maintain a sufficient distance to the air vents.

▶ If necessary, direct the airflow to another area of the vehicle interior.

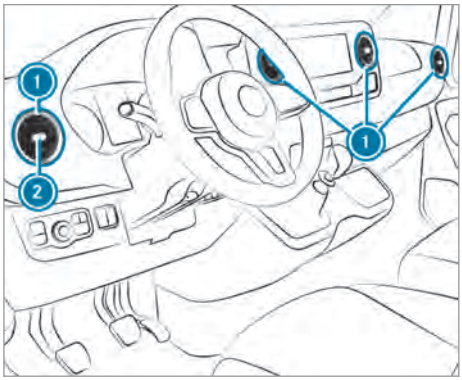

▶ **To open or close:** hold center ② of air vent ① and turn it to the left or right as far as it will go.

▶ **To set the air direction:** hold center ② of air vent ① and swivel it upwards, downwards, to the left or to the right.

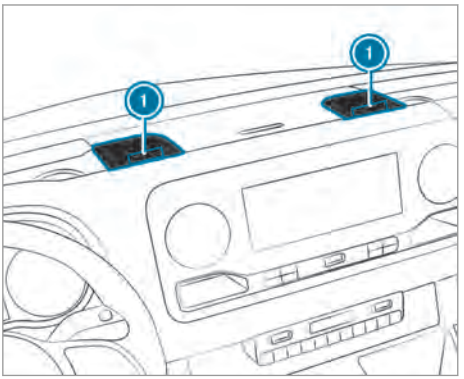

▶ **To open or close:** turn the adjustment wheels ① on the high-power air vents to the left or right as far as they will go.

ⓘ Cooled air will flow out of the high-power air vents. Heating will not be possible. Open the high-power air vents only in summer during cooling mode and keep them closed in winter.

Adjusting air vents in the roof air duct

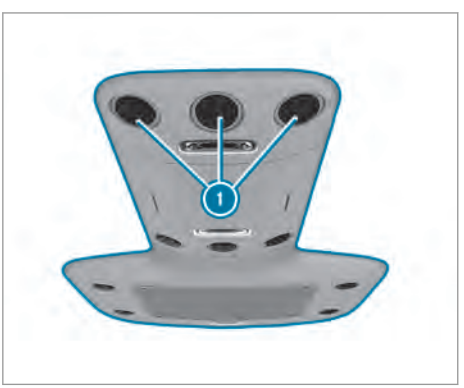

In vehicles with rear-compartment air conditioning, adjustable air vents have been integrated in the roof air duct.

▶ **Adjusting the airflow:** if necessary, open or close the air flaps in air vents ①.

▶ **Adjusting the air distribution:** turn air vents ① to the required position.

Ventilation nozzles in the rear

⚠ **WARNING** - Danger of burns or frostbite due to being too close to the air vents

Very hot or very cold air can flow from the air vents.

This could result in burns or frostbite in the immediate vicinity of the air vents.

▶ Make sure that all vehicle occupants always maintain a sufficient distance to the air vents.

▶ If necessary, direct the airflow to another area of the vehicle interior.

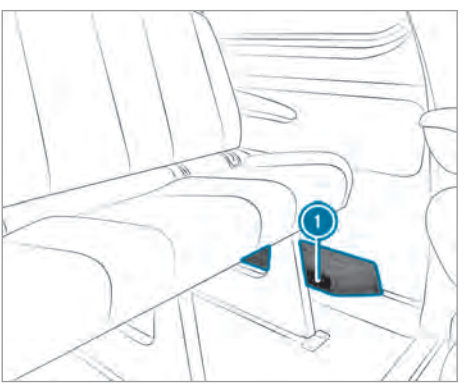

Depending on the vehicle equipment, there will be an air duct or a heater with additional air nozzles in the rear footwell on the left-hand side ①. No objects may be placed there. Passengers must maintain a sufficient distance due to the warm air flow and air intake.

Auxiliary heating

Function of the auxiliary heating

⚠ **DANGER** Risk of fatal injury due to poisonous exhaust gases

If the tailpipe is blocked or sufficient ventilation is not possible, poisonous exhaust gases such as carbon monoxide may enter the vehicle. This is the case in enclosed spaces or if the vehicle gets stuck in snow, for example.

▶ Always switch the stationary heater off in enclosed spaces without an air extraction systems, e.g. in garages.

▶ Keep the tailpipe and the area around the vehicle free from snow when the engine or the stationary heater are running.

▶ Open a window on the windward side of the vehicle to ensure an adequate supply of fresh air.

⚠ **WARNING** Risk of fire due to hot stationary heater components

When the stationary heater is switched on, parts of the vehicle can become very hot, e.g. the stationary heater exhaust system.

Flammable materials such as leaves, grass or twigs may ignite if they come into contact with:

- hot parts of the stationary heater exhaust system
- the exhaust gas itself

There is a risk of fire.

▶ When the stationary heater is switched on, make sure that:
  - Hot vehicle parts do not come into contact with flammable materials.
  - The exhaust gas can flow out of the stationary heater exhaust pipe unhindered.
  - The exhaust gas does not come into contact with flammable materials.

! **NOTE** Damage to the auxiliary heating

If the auxiliary heating is not used for an extended period of time, it can be damaged.

▶ Switch the auxiliary heating on for around ten minutes at least once a month.

! **NOTE** Damage to the auxiliary heating due to overheating

If the hot air flow is blocked, the auxiliary heating can overheat and switch off.

▶ Do not block the hot air flow.

ⓘ **Vehicles with modified fuel displays:** if an externally operated consumer is connected via the cable for the auxiliary heater, this is not taken into consideration on the "range remaining" display of the on-board computer. In this case, observe the fuel display. The fuel display provides the current level.

If you are transporting hazardous materials, comply with the relevant safety regulations. Always place objects at a sufficient distance from the outlet opening of the auxiliary heating.

Auxiliary heating works independently of the engine and complements the climate control system in the vehicle. Auxiliary heating heats the air inside the vehicle to the set temperature.

Hot-water auxiliary heater

Function of the hot-water auxiliary heater

The hot-water auxiliary heater complements your vehicle's climate control system, and has a heater booster, auxiliary heating and auxiliary ventilation function. In addition, the auxiliary heating system heats the engine coolant to protect the engine and save fuel during the warming-up phase. The auxiliary heating heats the air inside the vehicle to the set temperature. It is not dependent on the heat output of the running engine. The auxiliary heating is operated directly using the vehicle's fuel. For this reason, the fuel tank must have been filled above the reserve fuel level so that the auxiliary heating can work. The auxiliary heating automatically adapts its operating mode to the outside temperature and weather. It is therefore possible that the auxiliary heating may switch from ventilation to heating mode or from heating to ventilation mode. When the engine is running, auxiliary ventilation is not active. Auxiliary heating automatically switches itself off after a maximum of 50 minutes. You cannot use the "auxiliary ventilation" operating mode to cool the air inside the vehicle to below the outside temperature. Auxiliary heating helps to heat up the vehicle while the engine is running and at low outside temperatures.

Operating the hot-water auxiliary heater draws power from the vehicle battery. Therefore, drive a reasonably long distance after heating or ventilating the vehicle twice in succession at most.

Auxiliary heating can be activated only at temperatures below 40 °F (4.5 °C).

Switching the hot-water auxiliary heating on and off with the button

Requirements:

- The fuel tank is filled above the reserve fuel level.

Switching auxiliary heating on and off

- ▶ **To switch on:** press the button.
- ▶ **To switch off:** press the button.

Switching on the specified temperature

- ▶ Switch on the ignition.
- ▶ **To switch on:** press the button.
- ▶ **To switch off:** press the button.
- ▶ Set the temperature using the ▼▲ button.
- ▶ Press the button.
  The red or blue indicator lamp on the button goes on or off.

Colors of the indicator lamp:

- **Blue:** auxiliary ventilation has been switched on.
- **Red:** auxiliary heating has been switched on.
- **Yellow:** departure time has been pre-selected.

Auxiliary heating or ventilation switches off after a maximum of 50 minutes.

Switching heater booster mode on and off

- ▶ **To switch on:** start the engine.
- ▶ Press the button.
- ▶ **To switch off:** press the button.
  Heater booster mode will be switched on at an outside temperature of less than 32 °F (0 °C) when necessary.

ⓘ Heater booster mode is available only for vehicles with hot-water auxiliary heatings.

Adjusting the hot-water auxiliary heater with the on-board computer

Requirements:

- The fuel tank is filled above the reserve fuel level.
- The ignition is switched on.

On-board computer:

→ Settings ▸▸ Heating

Setting the switch-on time

- ▶ Select Settings.
- ▶ Select the desired departure time.

Activating the departure time

- ▶ Activate the departure time by ticking the box.

ⓘ Ensure that A, B and C each correspond to a programmed departure time.

ⓘ The programmed time remains set only until the next time the engine is started.

Selecting programmed time

- ▶ Set the required programmed time A, B or C.

ⓘ The required programmed time A, B or C will appear only if the box to activate the departure time is ticked.

- ▶ Select the required programmed time by swiping left or right, e.g. A, B or C.

Problems with hot water auxiliary heating

Problem	Possible causes/consequences and ▶ Solutions
FAIL	Signal transmission between transmitter and vehicle is malfunctioning. ▶ Change your position in relation to the vehicle, moving closer if necessary.
FAIL	The starter battery is not sufficiently charged. ▶ Charge the starter battery.
	The fuel tank is not filled up to the reserve level. ▶ Refuel at the nearest gas station.
FAIL	Auxiliary heating is malfunctioning. ▶ Have the auxiliary heating checked at a qualified specialist workshop.

Operating cargo compartment ventilation

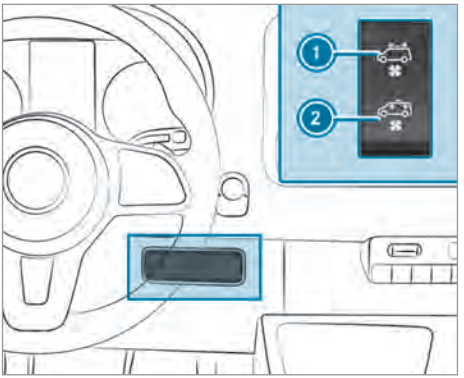

If your vehicle is equipped with a roof ventilator, you can admit fresh air to the cargo compartment, or extract air from it as well.

- Switch on the ignition.
- **To switch on and extract:** press switch 1 at the top.
  The roof ventilator removes used air from the cargo compartment.
- **To switch on and admit fresh air:** press switch 2 at the bottom.
  The roof ventilator feeds fresh air into the cargo compartment.
- **To switch off:** set the switch to the center position.

Driving

Switching on power supply or ignition with the start/stop button

⚠ **WARNING** Risk of accident and injury due to children left unattended in the vehicle

If children are left unattended in the vehicle, they could:

- open doors, thereby endangering other persons or road users.
- get out of the vehicle and be hit by oncoming traffic.
- operate vehicle equipment and become trapped, for example.

In addition, children could also set the vehicle in motion, for example, by:

- releasing the parking brake.
- shifting the automatic transmission out of park position P.
- starting the engine

▶ Never leave children and animals unattended in the vehicle.

▶ When leaving the vehicle, always take the SmartKey with you and lock the vehicle.

▶ Keep the SmartKey out of the reach of children.

⚠ **DANGER** Risk of fatal injuries due to exhaust gases

Combustion engines emit poisonous exhaust gases such as carbon monoxide. Inhaling these exhaust gases is hazardous to health and can lead to poisoning.

▶ Never leave the engine running in an enclosed space without sufficient ventilation.

⚠ **WARNING** Risk of fire caused by flammable material on the exhaust system

Flammable materials brought in by either animals or environmental influences may ignite if they come into contact with hot parts of the engine or exhaust system.

▶ Therefore, check regularly that there are no flammable materials in the engine compartment or on the exhaust system.

Requirements:

- The key is in detection range of the antenna (→ page 41) and the key battery is not discharged.

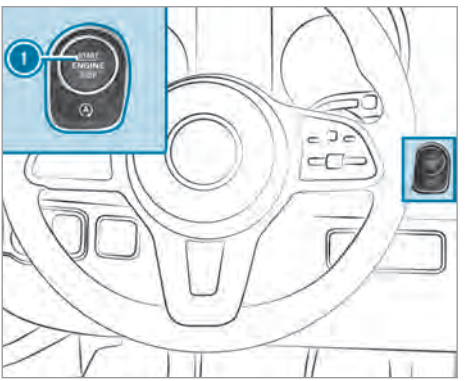

▶ **To switch on the power supply:** press button 1 once.
You can now activate the windshield wipers, for example.

The power supply is switched off again when one of the following conditions is met:

- the driver's door is open.
- you press button 1 twice.

▶ **To switch on the ignition:** press button 1 twice.
The indicator lamps appear in the instrument cluster.

The ignition is switched off again when one of the following conditions is met:

- you do not start the vehicle within 15 minutes.
- you press button 1 once.

Starting the engine

Starting the vehicle with the start/stop button

⚠ **WARNING** Risk of accident and injury due to children left unattended in the vehicle

If children are left unattended in the vehicle, they could:

- open doors, thereby endangering other persons or road users.
- get out of the vehicle and be hit by oncoming traffic.
- operate vehicle equipment and become trapped, for example.

In addition, children could also set the vehicle in motion, for example, by:

- releasing the parking brake.
- shifting the automatic transmission out of park position P.
- starting the engine

▶ Never leave children and animals unattended in the vehicle.

▶ When leaving the vehicle, always take the SmartKey with you and lock the vehicle.

▶ Keep the SmartKey out of the reach of children.

Requirements:

- The key is in detection range of the antenna (⟶ page 41) and the key battery is not discharged.

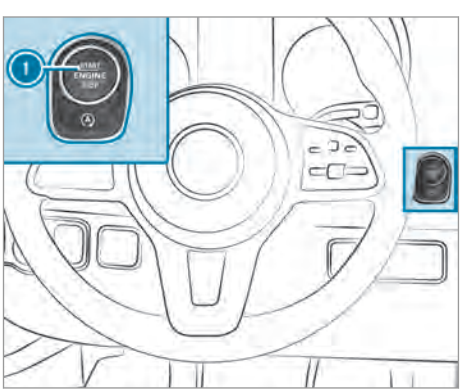

▶ **Vehicles with automatic transmission:** shift the transmission to position P or N.

▶ Depress the brake pedal and press button ① once.

▶ If the vehicle does not start: switch off unnecessary consumers and press button ① once.

▶ If the vehicle still does not start and the display message Place the Key in the Marked Space See Operator's Manual appears in the multifunction display: start the vehicle in emergency operation mode.

Starting the vehicle in emergency operation mode

⚠ **WARNING** Risk of accident and injury due to children left unattended in the vehicle

If children are left unattended in the vehicle, they could:

- open doors, thereby endangering other persons or road users.
- get out of the vehicle and be hit by oncoming traffic.
- operate vehicle equipment and become trapped, for example.

In addition, children could also set the vehicle in motion, for example, by:

- releasing the parking brake.
- shifting the automatic transmission out of park position P.
- starting the engine

▶ Never leave children and animals unattended in the vehicle.

▶ When leaving the vehicle, always take the SmartKey with you and lock the vehicle.

▶ Keep the SmartKey out of the reach of children.

If the vehicle does not start and the Place the Key in the Marked Space See Operator's Manual display message appears in the multifunction display, you can start the vehicle in emergency operation mode.

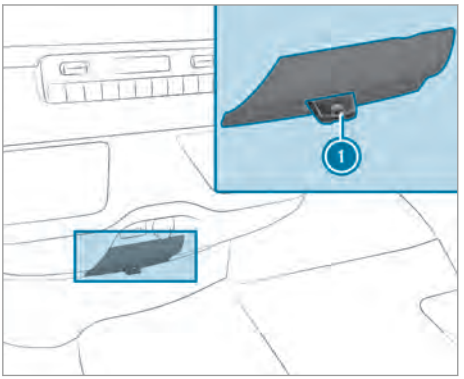

- ▶ Remove key ① from your key ring.
- ▶ Insert key ① into the slot.
  The vehicle is started after a brief time.
- ▶ Leave the key inserted during the entire journey.
- ▶ If you pull key ① out of the slot, the engine continues to run.
- ▶ Have key ① checked at a qualified specialist workshop.

If the vehicle does not start:

- ▶ Leave key ① in the slot.
- ▶ Press the brake pedal.
- ▶ Start the vehicle with the start/stop button.

ⓘ You can also switch on the power supply or the ignition with the start/stop button.

Breaking-in notes

Protect the engine during the first 1,000 miles (1,500 km) by:

- driving at varying road and engine speeds.
- shifting to the next gear up when or before the tachometer needle is ⅔ of the way to the red area.
- avoiding stress on the vehicle such as driving at full throttle.
- not shifting manually to a lower gear to brake.
- after 1,000 miles (1,500 km), gradually increasing the engine speed and accelerate the vehicle up to full speed.
- **vehicles with automatic transmission:** not depressing the accelerator pedal beyond the pressure point (kickdown).

This also applies if the engine or parts of the drivetrain have been replaced.

Also observe the following breaking-in notes:

- The sensors of the ESP® driving safety system adjust automatically while a certain distance is being driven after the vehicle has been delivered or after repairs. Full system effectiveness is not reached until the end of this teach-in process.
- New or exchanged brakepads, brake discs and tires only provide optimal braking and bonding after several hundred kilometers. Until then, compensate for the reduced braking effect by applying greater pressure to the brake pedal.

Driving tips

Notes on driving

⚠ WARNING Risk of accident due to objects in the driver's footwell

Objects in the driver's footwell may impede pedal travel or block a depressed pedal.

This jeopardizes the operating and road safety of the vehicle.

- ▶ Stow all objects in the vehicle securely so that they cannot get into the driver's footwell.
- ▶ Ensure floor mats and carpets cannot slip and provide sufficient room for the pedals.
- ▶ Do not lay multiple floor mats or carpets on top of one another.

⚠ WARNING Risk of accident due to unsuitable footwear

Operation of the pedals may be restricted due to unsuitable footwear such as:

- Shoes with platform soles
- Shoes with high heels
- Slippers

- ▶ When driving always wear suitable shoes in order to be able to operate the pedals safely.

WARNING Risk of accident when switching off the ignition when driving

If you switch off the ignition while driving, safety functions are restricted or no longer available. This may affect the power steering system and the brake force boosting, for example.

You will then need to use considerably more force to steer and brake.

▶ Do not switch off the ignition while driving.

DANGER Risk of fatal injuries due to exhaust gases

Combustion engines emit poisonous exhaust gases such as carbon monoxide. Inhaling these exhaust gases is hazardous to health and can lead to poisoning.

▶ Never leave the engine running in an enclosed space without sufficient ventilation.

DANGER Risk of fatal injury due to poisonous exhaust gases

If the tailpipe is blocked or sufficient ventilation is not possible, poisonous exhaust gases such as carbon monoxide may enter the vehicle. This is the case if the vehicle gets stuck in snow, for example.

▶ Keep the tailpipe and the area around the vehicle free from snow when the engine or the stationary heater are running.

▶ Open a window on the windward side of the vehicle to ensure an adequate supply of fresh air.

WARNING Risk of accident and injury due to being under the influence of alcohol and drugs while driving

Driving when under the influence of alcohol and/or drugs is an extremely dangerous combination. Even small quantities of alcohol or drugs may affect your reflexes, perception and judgment.

The probability of a serious or even fatal accident greatly increases if you drive when under the influence of alcohol or drugs.

▶ Do not drink alcohol or take drugs while driving, and do not allow anyone to drive who has been drinking alcohol or taking drugs.

WARNING Risk of accident and injury from operating mobile communications equipment

If you operate mobile communication equipment when driving, you will be distracted from the traffic situation. This could also cause you to lose control of the vehicle.

The probability of a serious or even fatal accident increases greatly if you operate mobile communication equipment when driving.

▶ Only operate mobile communication equipment when the vehicle is stationary.

For your own safety, always observe the following points when operating mobile communications equipment:

- Observe the legal requirements for the country in which you are driving.
- While driving, only operate mobile communications equipment when the traffic conditions permit it. You may otherwise be distracted from the traffic conditions and cause an accident, injuring yourself and others.

WARNING Risk of accident due to overheated brake system

If you rest your foot on the brake pedal during while driving, the brake system may overheat.

This increases the braking distance and the brake system may even fail.

▶ Never use the brake pedal as a footrest.

▶ Do not press the brake pedal and accelerator pedal simultaneously while driving.

On long and steep downhill gradients, you should change down to a lower gear in good time. Take particular note of this when driving a laden vehicle. By doing so, you will make use of the engine's braking effect. This relieves the load on the brake system and prevents the brakes from overheating and wearing too quickly.

NOTE Wearing out the brake linings by continuously depressing the brake pedal

- Do not depress the brake pedal continuously whilst driving.
- To use the braking effect of the engine, shift to a lower gear in good time.

NOTE Damage to the drivetrain and engine when pulling away

- Do not warm up the engine while the vehicle is stationary. Pull away immediately.
- Avoid high engine speeds and driving at full throttle until the engine has reached its operating temperature.

NOTE Damage to the catalytic converter due to non-combusted fuel

The engine is not running smoothly and is misfiring.

Non-combusted fuel may get into the catalytic converter.

- Only depress the accelerator pedal slightly.
- Have the cause rectified immediately at a qualified specialist workshop.

Exhaust emission monitoring

Specific engine systems are designed to keep poisonous components of exhaust emissions within legal limits.

These systems only work optimally if they are maintained exactly according to manufacturer's specifications. It is for this reason that all work on the engine should only be performed by qualified and authorized Mercedes-Benz Center technicians.

Under no circumstances should engine settings be changed. In addition, all specific maintenance work must be performed at regular intervals and in compliance with the service regulations of the dealer named in the imprint. Refer to the maintenance booklet for details.

Information about short-distance trips

If the vehicle is predominantly used for short-distance driving, fuel may accumulate in the engine oil and cause engine damage.

If you mainly drive short distances, you should drive on a freeway or go for a country drive for 20 minutes every 300 km (480 miles). This facilitates the regeneration of the diesel particulate filter.

Notes on the speed limitation

WARNING Risk of injury through exceeding the specified tire load rating or the permissible speed rating

Exceeding the specified tire load rating or the permissible speed rating may lead to tire damage and to the tires bursting.

- Therefore, only use tire types and sizes approved for your vehicle model.
- Observe the tire load rating and speed rating required for your vehicle.

As the driver, you must find out about the maximum permissible speed for the tires (tire and tire pressure). In particular, observe the legal requirements for tires for the country you are in.
You can permanently limit the speed of your vehicle.

Mercedes-Benz recommends a qualified specialist workshop for programming the speed limitation.

Before overtaking, take into consideration that the engine speed limiter prevents the speed increasing beyond the programmed speed limitation.

On downhill gradients, the speed limitation may be exceeded. Apply the brakes if necessary.

Display messages indicate that you are approaching the limit speed.

Information about foreign trips

Service

An extensive Mercedes-Benz service is also available abroad. Nevertheless, please remember that services or spare parts may not be available immediately. The relevant workshop directories are available from an authorized Mercedes-Benz Center.

Fuel

In some countries, only fuels with an increased sulfur content are available.

Unsuitable fuel can cause engine damage. Information about fuel can be found in the "Fuel" section (→ page 234).

Information about transport by rail

Transporting your vehicle by rail may be subject to certain restrictions or require special measures to be taken in some countries due to varying tunnel heights and loading standards.

You can obtain information about this from any authorized Mercedes-Benz Center.

Notes on brakes

⚠ **WARNING** Risk of skidding and of an accident due to shifting down on slippery road surfaces

If you shift down on slippery road surfaces to increase the engine braking effect, the drive wheels may lose traction.

▶ Do not shift down on slippery road surfaces to increase the engine braking effect.

⚠ **WARNING** Risk of accident due to the brake system overheating

If you leave your foot on the brake pedal when driving, the brake system may overheat.

This increases the braking distance and the brake system may even fail.

▶ Never use the brake pedal as a footrest.

▶ Do not depress the brake pedal and the accelerator pedal at the same time while driving.

Downhill gradients

On long and steep downhill gradients you should observe the following instructions:

- in vehicles with an automatic transmission, shift down to shift ranges **2** or **1** in good time so that the engine is running at a medium to high engine speed (⟶ page 117).

ⓘ Change the shift range in good time when cruise control is activated. Observe the driving tips (⟶ page 105).

You thereby make use of the braking effect of the engine and do not have to brake as often to maintain the speed. This relieves the load on the service brake and prevents the brakes from overheating and wearing too quickly.

Heavy and light loads

⚠ **WARNING** Risk of accident due to the brake system overheating

If you leave your foot on the brake pedal when driving, the brake system may overheat.

This increases the braking distance and the brake system may even fail.

▶ Never use the brake pedal as a footrest.

▶ Do not depress the brake pedal and the accelerator pedal at the same time while driving.

If the brakes have been subjected to a heavy load, do not stop the vehicle immediately. Drive on for a short while. The brakes cool down more quickly in the airflow.

If the brakes have been used only moderately, you should occasionally test their effectiveness. To do this, brake more firmly from a higher speed while paying attention to the traffic conditions. The brakes will grip better as a result.

Wet road surfaces

If you have been driving for a long time in heavy rain without braking, there may be a delayed response when you first apply the brakes. This may also occur after driving through a car wash or deep water. You must depress the brake pedal more firmly. Maintain a longer distance to the vehicle in front.

While paying attention to the traffic conditions, you should brake the vehicle firmly after driving on a wet road surface or through a car wash. This heats the brake discs so that they dry more quickly, which protects them against corrosion.

Limited braking effect on salt-treated roads:

- a layer of salt on the brake discs or brakepads can increase braking distances considerably, or braking may happen on only one side
- maintain an especially large safe distance to the vehicle in front

To remove the layer of salt:

- apply the brakes from time to time, paying attention to traffic conditions
- carefully depress the brake pedal at the end of a journey and after the start of a new journey

Checking the brakepad thickness

In addition to monitoring using the brakepad wear sensor, regularly monitor and check all of the

brakepads by performing a visual inspection to look for pad material wear.

If you are unable to check the brakepad wear on the inside of the wheels, remove the wheels if you possess the required skills, or visit a qualified specialist workshop.

If the brakepad material thickness is less than 0.12 in (3 mm), have the brakepads checked and replaced at a qualified specialist workshop, if necessary.

Do not solely rely on the brakepad wear sensor.

It is also strongly recommended that you have the brakepads checked at a qualified specialist workshop, not only at every service displayed by the maintenance interval display, but also prior to long journeys and whenever the wheels are removed.

New brake discs and brakepads

New brakepads and brake discs only reach their optimal braking effect after approximately 100 miles (100 kilometers).

Until then, compensate for the reduced braking effect by applying greater pressure to the brake pedal. For safety reasons, Mercedes-Benz recommends that you only have brakepads and brake discs which are approved by Mercedes-Benz installed on your vehicle.

Other brake discs or brakepads may compromise the safety of your vehicle.

Always replace all brake discs and brakepads on an axle at the same time. Always install new brakepads when replacing brake discs.

Parking brake

⚠ **WARNING** Risk of skidding or an accident by braking with the parking brake

If you have to brake your vehicle with the parking brake, the braking distance is considerably longer and the wheels may lock. There is an increased risk of skidding and/or accident.

- ▶ Only brake the vehicle with the parking brake if the service brake has failed.
- ▶ In this case, do not apply the parking brake with too much force.
- ▶ If the wheels lock, immediately release the parking brake as much as required for the wheels to turn again.

Vehicles with a manual parking brake

When driving on wet roads or dirt-covered surfaces, road salt or dirt may get into the parking brake. This causes corrosion and a reduction of braking force.

In order to prevent this, drive with the parking brake lightly applied from time to time.

When doing so, drive for a distance of approximately 300 ft at a maximum speed of 13 mph (20 km/h).

The brake lights do not light up when you brake the vehicle with the parking brake.

Information about driving on wet roads

Hydroplaning

⚠ **WARNING** Risk of aquaplaning because tire tread is too low

Depending on the depth of the water on the roadway, aquaplaning can occur despite sufficient tire tread depth and low speed.

- ▶ Avoid tire ruts and brake carefully.

Therefore, in heavy rain or other conditions in which hydroplaning can occur, drive as follows:

- Reduce your speed.
- Avoid tire ruts.
- Brake carefully.

Driving on flooded roads

Bear in mind that vehicles traveling in front or in the opposite direction create waves. This may cause the maximum permissible depth of water to be exceeded. These notes must be observed under all circumstances. Otherwise, you can damage the engine, electrics and transmission.

If you have to drive on stretches of road on which water has collected, please bear in mind the following:

- The water level of standing water may not be above the lower edge of the front bumper.
- You may drive no faster than walking pace.

Observe the notes on fording while off-road for all-wheel drive vehicles (→ page 110).

Information about driving in winter

DANGER Risk of fatal injury due to poisonous exhaust gases

If the tailpipe is blocked or sufficient ventilation is not possible, poisonous exhaust gases such as carbon monoxide may enter the vehicle. This is the case if the vehicle gets stuck in snow, for example.

- Keep the tailpipe and the area around the vehicle free from snow when the engine or the stationary heater are running.
- Open a window on the windward side of the vehicle to ensure an adequate supply of fresh air.

WARNING Risk of skidding and of an accident due to shifting down on slippery road surfaces

If you shift down on slippery road surfaces to increase the engine braking effect, the drive wheels may lose traction.

- Do not shift down on slippery road surfaces to increase the engine braking effect.

Vehicles with automatic transmissions may roll in neutral position N for only a short time. Allowing the wheels to roll for longer, e.g. when towing, causes transmission damage.

If the vehicle threatens to skid, or cannot be stopped when traveling at a low speed, you can stabilize the vehicle using the following measures:

- Shift the automatic transmission to neutral position N.
- Try to maintain control of the vehicle using corrective steering.

Drive particularly carefully on slippery roads. Avoid sudden acceleration, steering and braking maneuver.

Have your vehicle winterized at a qualified specialist workshop in good time at the onset of winter.

Observe the instructions in the section "Notes on snow chains" (→ page 203).

Regularly check the vehicle and remove snow or ice when traveling in wintry conditions.

An accumulation of snow and ice, particularly when frozen, in the area around the air intake, moving parts, the axles and the wheel housing, may cause the following problems:

- Obstruction of the air intake
- Damage to vehicle parts
- Malfunctions due to restriction of mobility intended by the design (e.g. reduced steering movement)

If there is any damage, inform a qualified specialist workshop.

Information about driving off-road

WARNING Risk of accident if you do not keep to line of fall on inclines

If you drive at an angle or turn on an incline, the vehicle could slip sideways, tip and rollover.

- Always drive on inclines in the line of fall (straight up or down) and do not turn.

WARNING Risk of injury due to accelerating force during off-road driving

When driving off-road on uneven surfaces, the force of the vehicle's acceleration affects your body from all directions.

You could, for example, be thrown from your seat.

- Always wear a seat belt when driving off-road.

WARNING Risk of injury to the hands when driving over obstacles

If you drive over obstacles or in tire ruts, the steering wheel may fold back and cause injuries to the hands.

- Steering wheel must always be held securely with both hands.
- When driving over obstacles, expect increased steering forces at short notice.

WARNING Risk of fire due to flammable materials on hot parts of the exhaust system

Flammable material such as leaves, grass or twigs may ignite if they come into contact with hot parts of the exhaust system.

- ▶ When driving on unpaved roads or off-road, regularly check the vehicle underside.
- ▶ Remove trapped plants or other flammable material.
- ▶ If there is damage, consult a qualified specialist workshop immediately.

! NOTE Damage to the vehicle after driving off-road

When driving off-road or on unpaved surfaces, foreign bodies such as stones and branches could become trapped on the vehicle underside, on wheels and tires, causing damage to the vehicle.

Foreign bodies could cause the following damage:

- Damage the suspension, the fuel tank or the brake system.
- Disturb the balance and cause vibrations.

- ▶ Regularly remove any trapped foreign bodies, e.g. stones and branches.
- ▶ After driving off-road, check carefully whether there is any damage to the vehicle.
- ▶ If there is damage, have the vehicle checked at a qualified specialist workshop.

When driving off-road or on unpaved surfaces, check the vehicle underside, wheels and tires regularly at regular intervals. In particular, remove any trapped foreign bodies, e.g. stones and branches.

Observe the following notes regarding foreign bodies of this kind:

- They may damage the suspension, the fuel tank or the brake system.
- They may disturb the balance and cause vibrations.
- They may be flung out from the vehicle when you continue driving.

If there is any damage, inform a qualified specialist workshop.

When driving off-road on steep inclines, you must make sure that the DEF tank is sufficiently filled. Therefore, ensure a level of at least ten liters before off-road driving.

When driving off-road and on construction sites, sand, mud and water, also mixed with oil, can get into the brakes. This may lead to a reduction in braking effect or total brake failure, also as a result of increased wear. The braking characteristics will vary depending on the material that has got into the system. Clean the brakes after driving off-road. If you then notice a reduced braking effect or hear scraping noises, have the brake system checked immediately at a qualified specialist workshop. Adjust your driving style to the changed braking characteristics.

Driving off-road or on construction sites increases the possibility of vehicle damage which may in turn lead to the failure of certain major assemblies and systems. Adapt your driving style to the off-road driving conditions. Drive carefully. Have any vehicle damage rectified at a qualified specialist workshop as soon as possible.

When driving on rough cross-country terrain, do not shift the transmission into the neutral position and do not disengage the clutch. You could lose control when attempting to brake the vehicle with the service brake. If your vehicle cannot manage an uphill incline, drive back down in reverse gear.

When loading your vehicle for off-road driving or on a construction site, keep the vehicle's center of gravity as low as possible.

Checklist before off-road driving

- Check the fuel and DEF levels (→ page 158) and add if necessary (→ page 125).
- **Engine:** check the oil level and add oil if necessary (→ page 176). Before driving up or down extreme inclines or slopes, fill the oil to the maximum level.

ⓘ If you drive up or down extreme inclines or slopes, the [ ] symbol may appear in the multifunction display. The engine operating safety is not put at risk if you have filled the engine oil to the maximum level before the journey.

- **Vehicle tool kit:** check that the jack is working (→ page 220).
- Make sure that a lug wrench (→ page 220), a wooden underlay for the jack, a robust tow rope, a folding spade and a wheel chock are carried in the vehicle.
- **Tires and wheels:** check the tire tread depth (→ page 202) and the tire pressure (→ page 209).

Rules for off-road driving

Always be aware of the ground clearance of the vehicle and avoid obstacles such as deep tire ruts.

Obstacles can damage the following parts of the vehicle, for example:

- Suspension
- Drivetrain
- Fuel and supply tanks

Therefore, always drive slowly when off-road. If you must drive over obstacles, have the co-driver instruct you.

ⓘ Mercedes-Benz recommends that you additionally carry a shovel and a recovery rope with a shackle in the vehicle.

- Make sure that loads and items of luggage are securely stored or lashed down (→ page 72).
- Before driving off-road, stop the vehicle and engage a low gear.
- **Vehicles with DSR:** activate DSR when you are driving downhill (→ page 120).
- **All-wheel drive vehicles:** activate the all-wheel drive (→ page 119) and, if necessary, activate the LOW RANGE transmission ratio (→ page 119).
- If the surface requires, temporarily deactivate ASR when pulling away (→ page 119).
- Only drive off-road with the engine running and a gear engaged.
- Drive slowly and smoothly. Walking pace is necessary in many situations.
- Avoid spinning the driven wheels.
- Always ensure that the wheels remain in contact with the ground.
- Exercise the utmost caution when driving across unfamiliar, unpredictable terrain. As a precaution, get out of the vehicle to take a look at the route to be taken first.
- Look out for obstacles (e.g. rocks, holes, tree stumps and tire ruts).
- Avoid edges where the surface could crumble or break away.

Rules for fording off-road (all-wheel drive vehicles)

- Observe the safety notes and general notes on driving off-road.
- Check the depth and characteristics of the body of water before fording. The water must not be deeper than 23.6 in (60 cm).
- The climate control system is switched off (→ page 95).
- The auxiliary heating is switched off (→ page 100).
- Switch on all-wheel drive (→ page 118) and engage it on vehicles with the LOW RANGE transmission ratio (→ page 119).
- Restrict the shift range to **1** or **2**.
- Avoid high engine speeds.
- Drive slowly and smoothly at no more than a walking pace.
- Ensure that no bow wave forms while driving.
- After fording, dry the brakes.

After driving through a body of water deeper than 19.7 in (50 cm), make sure to check all vehicle fluids for any signs of penetration by water.

Checklist after driving off-road

If you find damage to the vehicle after off-road driving, have the vehicle checked at a qualified specialist workshop immediately.

Driving over rough terrain places greater demands on your vehicle than normal road operation. Check your vehicle after driving on rough terrain. This allows you to detect damage promptly and reduce the risk of an accident for yourself and other road users. Clean your vehicle thoroughly before driving on public roads.

Observe the following points after driving off-road, on construction sites and before driving on public roads:

- **Vehicles with DSR:** deactivate DSR (→ page 120).
- **All-wheel drive vehicles:** deactivate the all-wheel drive (→ page 119).
- Activate ASR (→ page 119).
- Clean the exterior lighting, particularly the headlamps and tail lamps, and check them for damage.
- Clean the front and rear license plates.
- Clean the windshield, windows and outside mirrors.
- Clean the steps, entrances and grab handles. This increases the safety of your footing.
- Clean the wheels and tires, wheel wells and the underbody of the vehicle with a water jet.

This increases road adhesion, especially on wet roadways.

- Check the wheels and tires and wheel wells for trapped foreign objects and remove them. Trapped foreign objects can damage the wheels and tires or may be flung out from the vehicle when continuing the journey.
- Check the underbody for trapped branches or other parts of plants and remove them.
- Clean the brake discs, brakepads and axle joints, particularly after operation in sand, mud, grit and gravel, water or similarly dirty conditions.
- Check the entire floor assembly, the tires, wheels, bodywork structure, brakes, steering, suspension and exhaust system for any damage.
- Check the service brake for operating safety, e.g. carry out a brake test.
- If you notice strong vibrations after driving off-road, check the wheels and drivetrain for foreign objects again. Remove any foreign objects which can lead to imbalances and thus cause vibrations. In the event of damage to the wheels and the drive train, visit a qualified specialist workshop immediately.

ECO display function

The ECO display summarizes the driving characteristics from the start of the journey to its completion and assists you in achieving the most economical driving style.

You can influence consumption if you:

- anticipate road and traffic conditions.
- observe the gearshift recommendations.

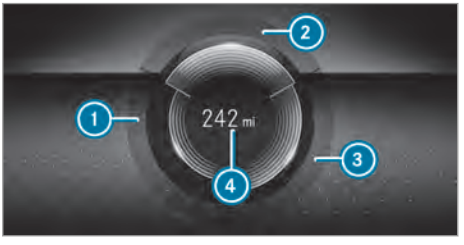

Instrument Display with color display

The segment's lettering lights up bright, the outer edge lights up and the segment is filled, in the following cases:

- ① ACCELERATION: moderate acceleration
- ② CONSTANT: consistent speed
- ③ COASTING: gentle deceleration and rolling

The segment's lettering is gray, the outer edge is dark and the segment is emptied, in the following cases:

- ① ACCELERATION: sporty acceleration
- ② CONSTANT: fluctuations in speed
- ③ COASTING: heavy braking

You have driven economically when:

- the three segments fill up completely at the same time
- the edge around all three segments lights up

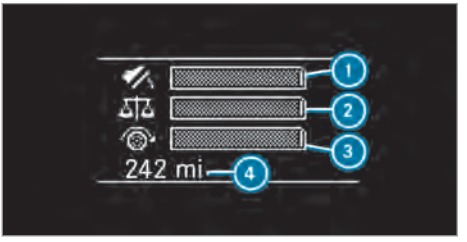

Instrument Display with black and white display

The bars fill up in the following cases:

- ① Moderate acceleration
- ② Consistent speed
- ③ Gentle deceleration and rolling

The bars empty in the following cases:

- ① Sporty acceleration
- ② Fluctuations in speed
- ③ Heavy braking

The display shows additional range ④ Bonus XXX mi From Start or XXX mi From Start achieved as a result of your driving style in comparison to a driver with a very sporty driving style. The range displayed does not indicate a fixed reduction in consumption.

Diesel particulate filter

Notes on regeneration

DANGER Risk of fatal injuries due to exhaust gases

Combustion engines emit poisonous exhaust gases such as carbon monoxide. Inhaling these exhaust gases is hazardous to health and can lead to poisoning.

▶ Never leave the engine running in an enclosed space without sufficient ventilation.

WARNING Risk of fire caused by hot exhaust system parts

Flammable material such as leaves, grass or twigs may ignite if they come into contact with hot parts of the exhaust system or exhaust gas flow.

▶ Park the vehicle so that no flammable material can come into contact with hot vehicle components.

▶ In particular, do not park on dry grassland or harvested grain fields.

If the vehicle is predominantly used for short distance driving or extended non-operational times, this could lead to a malfunction in the automatic cleaning function for the diesel particulate filter. As a result, permanent blocking of the diesel particulate filter may occur and fuel may also accumulate in the engine oil and cause engine failure.

If you mainly drive short distances, you should drive on a freeway or go for a country drive for 20 minutes every 500 km (300 miles). This facilitates the diesel particulate filter's burn-off process.

NOTE Damage due to hot exhaust gases

During regeneration, extremely hot exhaust gases escape from the tailpipe.

▶ During regeneration, maintain a minimum distance of 7 ft (2 m) from other objects, e.g. parked vehicles.

Battery main switch

Notes on the battery main switch

NOTE Damage to the electrical system

If you remove or disconnect the battery main switch, it could lead to the electrical system becoming damaged.

▶ Make sure that the ignition is switched off and that at least 15 minutes have passed before removing or reconnecting the battery main switch. Otherwise, electrical system components could be damaged.

You can use the battery main switch to disconnect the current to all your vehicle's consumers. This will prevent uncontrolled battery discharge caused by quiescent current consumers.

If your vehicle is equipped with an auxiliary battery in the engine compartment or in the base of the front-passenger seat, you must disconnect both batteries. Only then is the electrical system fully disconnected from the power supply.

ⓘ Only disconnect the vehicle from the power supply using the battery main switch in the following situations:

- The vehicle is stationary for a long time
- It is absolutely necessary to disconnect the vehicle from the power supply

After switching on the power supply, you will need to reset the side windows (→ page 53) and the electric sliding door (→ page 49).

Switching the power supply on/off

Switching off the power supply

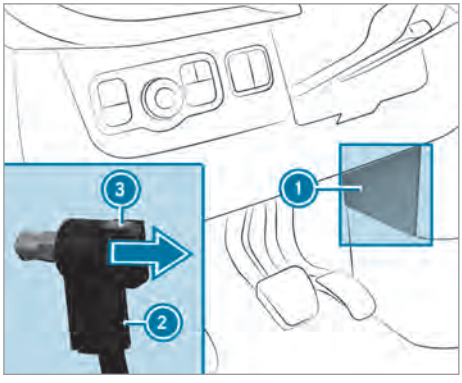

- Switch off the ignition and wait at least 15 minutes.
- Remove cover ①.
- Press and hold button ③.
- Pull plug ② out of the ground pin.
- Push plug ② as far as possible in the direction of the arrow so that it cannot make contact with the earth pin.
  All starter battery consumers are disconnected from the power supply.

Switching on the power supply

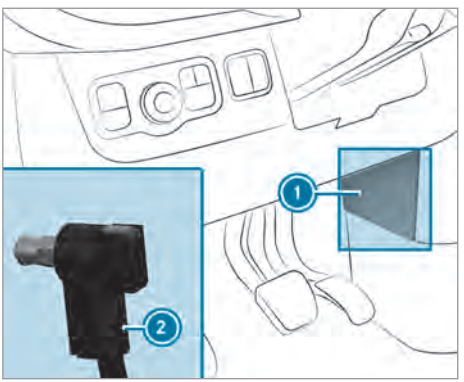

- Press plug ② onto the ground pin until you feel it engage and plug ② is in full contact with the ground pin.
  All starter battery consumers are reconnected to the power supply.
- Fasten cover ①.

Automatic transmission

DIRECT SELECT lever

Function of the DIRECT SELECT lever

WARNING Risk of accident and injury due to children left unattended in the vehicle

If children are left unattended in the vehicle, they could:

- open doors, thereby endangering other persons or road users.
- get out of the vehicle and be hit by oncoming traffic.
- operate vehicle equipment and become trapped, for example.

In addition, children could also set the vehicle in motion, for example, by:

- releasing the parking brake.
- shifting the automatic transmission out of park position P.
- starting the engine

- Never leave children and animals unattended in the vehicle.
- When leaving the vehicle, always take the SmartKey with you and lock the vehicle.
- Keep the SmartKey out of the reach of children.

WARNING Risk of accident due to incorrect gearshifting

If the engine speed is higher than the idle speed and you engage the transmission position D or R, the vehicle may accelerate sharply.

- If you engage the transmission position D or R always depress the brake pedal firmly and do not accelerate at the same time.

You use the DIRECT SELECT lever to switch the transmission position. The current transmission position appears in the multifunction display.

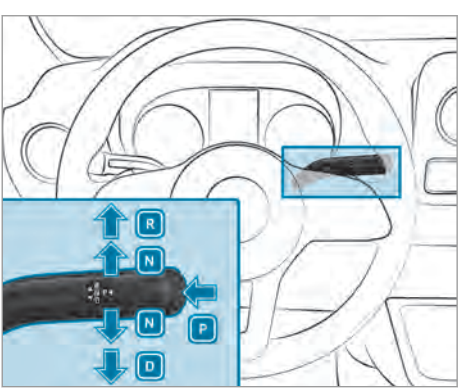

P Park position
R Reverse gear
N Neutral
D Drive position

Engaging reverse gear R

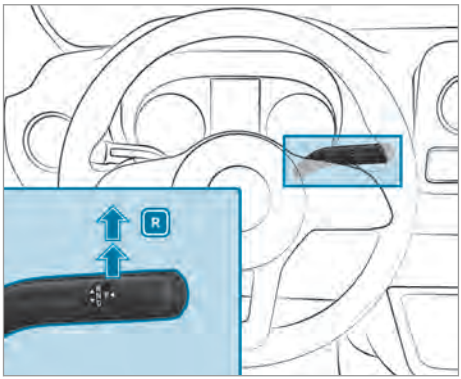

▶ Depress the brake pedal and push the DIRECT SELECT lever upwards past the first point of resistance.
Transmission position display R is shown in the multifunction display.

Selecting neutral N

WARNING Risk of accident and injury when neutral position is engaged

If you park the vehicle with the transmission in neutral position N and the parking brake is not engaged, the vehicle may roll away.

There is a risk of accident and injury.

▶ Before parking the vehicle, apply the parking brake.

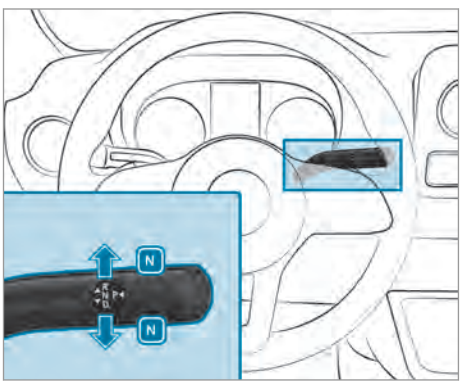

▶ Press the brake pedal and the DIRECT SELECT lever upwards or downwards to the first point of resistance.
Transmission position display N is shown in the multifunction display.

Releasing the brake pedal will allow you to move the vehicle freely, e.g. to push it or tow it.

If the automatic transmission should also stay in neutral N when the ignition is switched off, carry out the following:

▶ Start the vehicle.

▶ Depress the brake pedal and shift to neutral N.

▶ Release the brake pedal.

▶ Switch off the ignition.

ⓘ If you then leave the vehicle and the Smart-Key is still in the vehicle, the automatic transmission will stay in neutral N from then on.

Engaging park position P

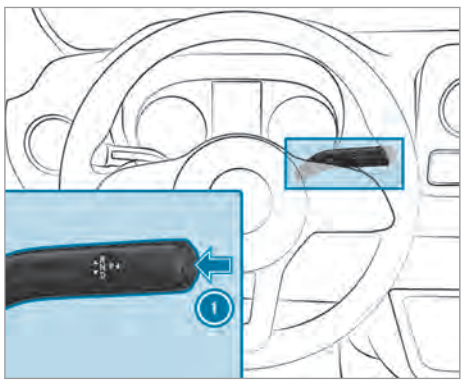

▶ Press button 1.
Transmission position display P is shown in the multifunction display.

Park position P is engaged automatically when one of the following conditions is met:

- You switch off the engine in transmission position D or R.
- You open the driver's door when the vehicle is stationary or when driving at a very low speed and in transmission position D or R.
- You open the seat belt buckle when the vehicle is stationary or when driving at a very low speed.
- You leave your seat when the vehicle is stationary or when driving at a very low speed.

Engaging drive position D

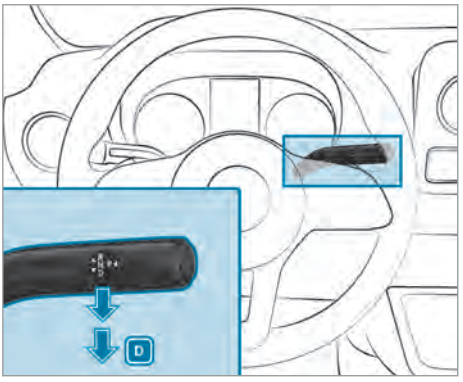

▶ Depress the brake pedal and push the DIRECT SELECT lever downwards past the first point of resistance.
Transmission position display D is shown in the multifunction display.

The automatic transmission shifts through the individual gears automatically when it is in transmission position D. This is determined by the following factors:

- Position of the accelerator pedal
- Driving speed

Restricting the shift range

Requirements:

- Transmission position D is engaged (→ page 117).

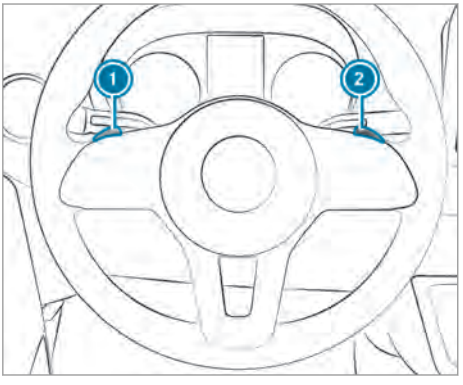

▶ **To restrict the shift range:** briefly pull steering wheel paddle shifter 1.
The automatic transmission shifts to the next gear down, depending on the gear currently engaged. The shift range is also restricted.

The shift range selected is shown in the multifunction display. The automatic transmission shifts only as far as the selected gear.

▶ Pull and hold steering wheel paddle shifter 1.
The automatic transmission will change to a shift range which allows easy acceleration and deceleration. To do this, the automatic transmission shifts down one or more gears and restricts the shift range.

The shift range selected is shown in the multifunction display. The automatic transmission shifts only as far as the selected gear.

ⓘ The automatic transmission does not shift down if you pull steering wheel paddle shifter 1 whilst traveling at too high a speed.
If the shift range is restricted and the maximum engine speed for the restricted shift range is reached, the automatic transmission will not shift up.

▶ **To derestrict the shift range:** briefly pull steering wheel paddle shifter 2.
The automatic transmission shifts to the next gear up, depending on the gear currently engaged. This derestricts the shift range at the same time.

The shift range selected is shown in the multifunction display. The automatic transmission shifts only as far as the selected gear.

▶ **To derestrict the shift range:** pull and hold steering wheel paddle shifter 2.

or

▶ Engage transmission position D again (→ page 117).
The automatic transmission shifts up one or more gears depending on the gear currently engaged. Simultaneously, the shift range restriction is deactivated and the transmission position appears in the multifunction display D.

Adapt the shift range to the driving situation:

3 Use the engine's braking effect.

2 Use the engine's braking effect on downhill gradients and when driving on steep roads, in mountainous areas as well as under arduous operating conditions.

1 Use the engine's braking effect on extremely steep downhill gradients and on long downhill stretches.

Using kickdown

▶ **For maximum acceleration:** depress the accelerator pedal beyond the pressure point.

▶ Ease off the accelerator pedal once the desired speed is reached.

All-wheel drive

Notes on all-wheel drive

All-wheel drive ensures permanent drive for all four wheels, and together with ESP® it improves the traction of the vehicle.

The traction control of the all-wheel drive also takes place via the brake system. Therefore, the brake system can overheat during extreme off-road use. In this case, ease off the accelerator pedal or stop to allow the brake system to cool down.

If a driven wheel spins due to insufficient traction, observe the following notes:

- When pulling away, make use of the traction control integrated in ESP®. Depress the accelerator pedal as far as necessary.
- Take your foot off the accelerator pedal, slowly, while the vehicle is in motion.

In wintry driving conditions, always use winter tires (M+S tires) and, if necessary, snow chains (→ page 203). Only in this way can the maximum effect of all-wheel drive be achieved.

Use DSR (Downhill Speed Regulation) when driving downhill off-road (→ page 120).

If you fail to adapt your driving style or if you are inattentive, the all-wheel drive system can neither reduce the risk of an accident nor override the laws of physics. The all-wheel drive system cannot take road, weather and traffic conditions into account. The all-wheel drive system is only an aid. You are responsible for maintaining a safe distance from the vehicle in front, for vehicle speed, for braking in good time and for staying in lane.

! NOTE Risk of damage to the drivetrain and the brake system

If you operate vehicles with all-wheel drive on a one-axle test stand, you may damage the drivetrain or the brake system.

▶ A function or performance test should only be carried out on a two-axle test stand.

▶ If you wish to operate the vehicle on such a test stand, please consult a qualified specialist workshop in advance.

! NOTE Risk of damage to the transfer case

If you tow the vehicle with a raised axle, the transfer case can get damaged. Such damage is not covered by Mercedes-Benz Limited Warranty.

▶ Never tow the vehicle with a raised axle.

▶ Only tow the vehicle with all wheels on the ground or fully raised.

▶ Note the instructions on towing the vehicle with full contact with the ground for all wheels.

Engaging all-wheel drive

Conditions for engaging/disengaging

You can engage and deactivate the all-wheel drive when stationary or while driving slowly.

When stationary, the following must be observed:

- The engine is running.
- The steering wheel in the straight-ahead position.

If the all-wheel drive cannot be engaged when stationary:

▶ **Vehicles with automatic transmission:** shift the selector lever from N to D from D to N from N to R and back to N. Engaging and disengaging the all-wheel drive can be made easier in this way.

Observe the following when driving slowly:

- The engine is running.
- The vehicle is not traveling faster than 6.2 mph (10 km/h).
- The vehicle is not being driven around a bend.

If it is not possible to engage all-wheel drive when the vehicle is rolling:

▶ **Vehicles with automatic transmission:** briefly move the selector lever to N.

Engaging/disengaging all-wheel drive

! NOTE Risk of damage to the transfer case

If you step on the accelerator pedal while the all-wheel drive is engaged or disengaged, the transfer case may be damaged.

▶ Do not step on the accelerator pedal when the indicator lamp in the switch for the all-wheel drive is flashing.

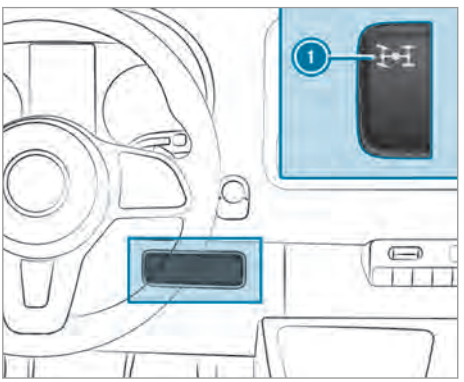

▶ **To engage/disengage:** press the upper section of switch 1.
The indicator lamp in switch 1 flashes while the all-wheel drive is engaged or disengaged.

The [ ] and [ ] warning lamps light up in the instrument display. ESP® and ASR are deactivated for the duration of the shift operation. If the shift operation is successful, the [ ] and [ ] warning lamps in the instrument display go out and ESP® and ASR are reactivated.

As long as the indicator lamp in switch 1 is flashing, you can cancel the shift operation by pressing switch 1 again. If the shift operation fails, the indicator lamp in switch 1 briefly flashes three times. One of the shift conditions was not met.

If the indicator lamp in switch 1 lights up, all-wheel drive is engaged. A relevant message appears in the display of the on-board computer.

ⓘ If the LOW RANGE gear reduction is engaged, the all-wheel drive cannot be disengaged.

Function of the LOW RANGE gear reduction

The LOW RANGE gear reduction enables very slow driving in the respective gears. If you engage LOW RANGE, the engine's performance characteristics and the automatic transmission's shifting characteristics are adjusted accordingly. The transmission ratio from the engine to the wheels is around 40% lower than in the road position. The drive torque is increased correspondingly.

Conditions for engaging/disengaging

The following shifting conditions must be met in order to engage or disengage LOW RANGE:

- All-wheel drive is engaged (→ page 119).
- The engine is running.
- The vehicle is stationary.
- You depress the brake pedal.
- **Vehicles with automatic transmission:** the selector lever is in position P or N.

Engaging and disengaging LOW range

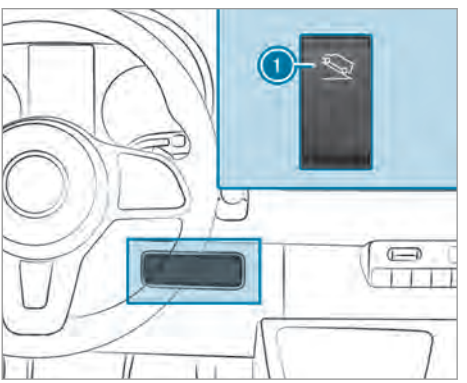

1 Engaging and disengaging LOW range

ⓘ On vehicles with DSR (Downhill Speed Regulation), switch 1 is replaced with the switch for DSR.

▶ **To engage and disengage:** press the upper section of switch ①.

The LOW RANGE indicator lamp flashes in the instrument display for the duration of the shift operation.

- When the shift operation takes place and LOW RANGE is engaged, the LOW RANGE indicator lamp lights up.
- When the shift operation takes place and LOW RANGE is disengaged, the LOW RANGE indicator lamp goes out.

As long as the indicator lamp LOW RANGE is flashing, you can cancel the shift operation by pressing button ① again. If the shift operation fails, the indicator lamp LOW RANGE briefly flashes three times. One of the shift conditions was not met.

DSR (Downhill Speed Regulation)

Notes on DSR

If you fail to adapt your driving style or you are inattentive, DSR can neither reduce the risk of accident nor override the laws of physics. DSR cannot take road, weather and traffic conditions into account. DSR is only an aid. You are responsible for a safe distance to the vehicle in front, for vehicle speed and for braking in good time.

DSR supports you when driving downhill. DSR maintains a set speed for you on downhill gradients by applying the brakes as required. Maintaining the speed is dependent on the road surface conditions and the downhill gradient and cannot therefore be guaranteed in all situations.

You can set the speed depending on the gear range to between 2 mph (4 km/h) and 11 mph (18 km/h) using the brake and accelerator pedals or the rocker switch on the steering wheel.

DSR automatically controls in the following situations:

- If the vehicle is stationary, or its speed is less than 2 mph (4 km/h) , the speed is set to 2 mph (4 km/h) or it is set to the minimum speed for the respective gear range.
- If you drive faster than 11 mph (18 km/h) offroad, DSR switches to standby mode. DSR remains activated, but does not brake automatically.
- If you drive downhill slower than 11 mph (18 km/h), DSR sets the speed to the previously set speed.
- If you drive faster than 28 mph (45 km/h), DSR switches off automatically.

Activating/deactivating DSR

Activating DSR

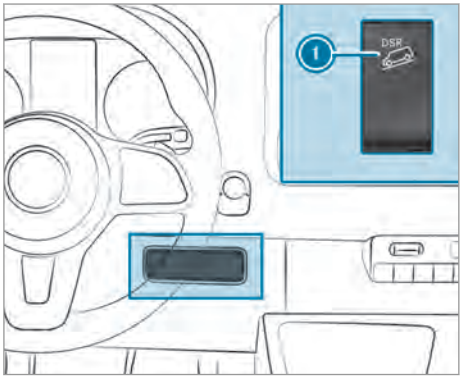

You can activate DSR when the vehicle is stationary or moving.

▶ Press the upper section of switch ①.

▶ Brake or accelerate the vehicle to the desired speed between 2 mph (4 km/h) and 11 mph (18 km/h).

▶ Release the brake or accelerator pedal.
The current speed is stored. When stationary, 2 mph (4 km/h) or the minimum possible speed for each gear range is stored. DSR maintains the stored speed on the downhill gradient and brakes automatically.

When DSR is activated and the vehicle pulls away, accelerates or brakes, the speed set corresponds to the speed at which the accelerator or brake pedal is released or the rocker switch is pressed during DSR regulation. This is only the case if you are not driving faster than 11 mph (18 km/h).

DSR status display in the on-board computer

- **DSR is activated:**
  - DSR and the set speed appear in the status area of the on-board computer.
- **DSR is activated, but is not intervening:**
  - you are driving between 11 mph (18 km/h) and 28 mph (45 km/h).
  - DSR and the speed 11 mph (18 km/h) appear in the status area of the on-board computer.

DSR is in standby mode.

- **DSR is inactive:**
  - as soon as you exceed a speed of 28 mph (45 km/h).
  - DSR appears in the status area of the on-board computer. In addition, the DSR Off message appears.
  - DSR - - - appears in the status area of the on-board computer.

Setting the speed while driving downhill

You can set the speed depending on the gear range to between 2 mph (4 km/h) and 11 mph (18 km/h) using the brake and accelerator pedals or the rocker switch on the steering wheel.

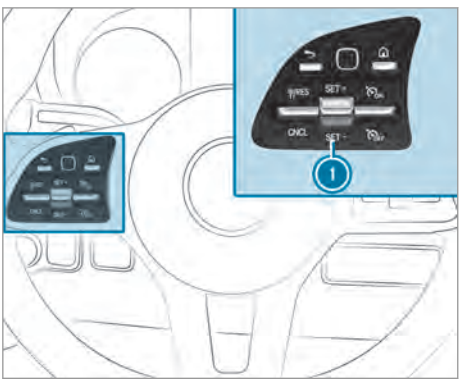

▶ Brake or accelerate the vehicle to the desired speed on the downhill gradient.

▶ Release the brake or accelerator pedal.
The current speed is stored.

or

▶ Press rocker switch 1 up or down during a DSR regulation.
The last saved speed is increased or reduced.

▶ Release rocker switch 1.
The current speed is stored.

or

▶ Press rocker switch 1 up or down until desired speed is reached.

▶ Release rocker switch 1.
The current speed is stored.

ⓘ It may be a moment before the vehicle starts to brake to the set speed. Take this delay into account when setting the speed with rocker switch 1.

Deactivating DSR

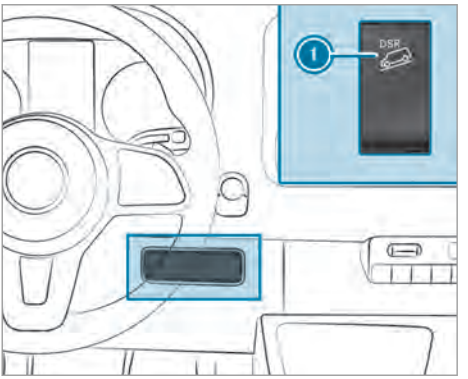

▶ Press the upper section of switch 1.

or

▶ Accelerate and drive faster than 28 mph (45 km/h).

DSR deactivates automatically in the following situations:

- As soon as you exceed a speed of 28 mph (45 km/h).
- There is a malfunction in the ESP® or ABS system.

Electronic level control

Function of ENR (electronic level control)

⚠ **WARNING** Risk of entrapment from vehicle lowering

When lowering the vehicle, people could become trapped if their limbs are between the vehicle body and the tires or underneath the vehicle.

▶ Make sure no one is underneath the vehicle or in the immediate vicinity of the wheel arches when you lower the vehicle.

⚠ **WARNING** Risk of injury from jack tipping

If you park a vehicle with air suspension, the air suspension may remain activated for up to one hour, even when the ignition is switched off. If you then raise the vehicle with the jack, the air suspension will attempt to adjust the vehicle level.

The jack may tip.

▶ Press the Service button on the air suspension remote control before raising the vehicle.
This prevents automatic readjustment of the vehicle level and prevents it from being raised or lowered manually.

WARNING Risk of accident due to lowered or raised chassis

Driving with a lowered or raised chassis may greatly impair braking and handling characteristics. You may also exceed the permissible vehicle height when the chassis is raised.

▶ Set the driving level before pulling away.

WARNING Risk of accident from malfunction of electronic level control

If electronic level control is malfunctioning, the vehicle level may be asymmetrical, too high or too low.

The driving and steering characteristics of the vehicle may be noticeably different.

▶ Adapt your driving style accordingly and drive carefully.

▶ Stop, paying attention to road and traffic conditions.

▶ Consult a qualified specialist workshop.

NOTE Risk of damage to the chassis from lowered vehicle level

If electronic level control is malfunctioning or readjusts while you are driving, the vehicle level may be lowered.

▶ Pay attention to the road conditions and ensure there is sufficient ground clearance.

▶ Drive carefully.

The level of the vehicle depends on vehicle load and the load distribution. Electronic level control adjusts the level of the rear axle automatically on vehicles with an air-sprung rear axle. The vehicle level is thereby always maintained at the driving level, regardless of vehicle load. Driving dynamics remain unaffected. The height difference between the sides of the vehicle may be up to 0.4 in (1 cm).

Electronic level control is not engine-dependent and is only operational when the ignition is switched on. The electronic level control compressor works audibly.

ⓘ If the compressor works constantly or starts up several times per minute, electronic level control is malfunctioning.

Depending on the vehicle equipment, electronic level control switches between manual and automatic mode depending on either the vehicle speed or the position of the parking brake.

If electronic level control switches depending on vehicle speed, manual operation is automatically activated when the vehicle is stationary. You may raise or lower the vehicle level. If you subsequently drive faster than 6 mph (10 km/h), manual mode is automatically deactivated and automatic mode sets the vehicle level.

If electronic level control switches depending on the parking brake position, manual mode is automatically activated when the parking brake is applied. You may raise or lower the vehicle level to load and unload. If you release the parking brake, manual mode is automatically deactivated and automatic mode sets the driving level.

When working on the vehicle or changing a wheel, you can deactivate electronic level control (→ page 123).

If electronic level control is malfunctioning or the vehicle level is too high or too low, an audible signal sounds.

The driving and steering characteristics of the vehicle will be noticeably different. Electronic level control adjusts the vehicle level to the normal level as soon as possible. Continue driving carefully until the audible signal stops. Only then is the vehicle at normal level.

Automatic mode and electronic level control automatically switch on again to restore the vehicle level, depending on the option selected:

- when the parking brake is released
- from speeds of approximately 6 mph (10 km/h)

If the electronic level control compressor threatens to overheat, e.g. due to repeated raising or lowering within a short period, electronic level control is deactivated. You can raise or lower the vehicle level again after approximately one minute.

Raising and lowering the vehicle level

Using the remote control

The remote control is located in a holder on the B-pillar on the driver's side. Remove the remote control from the holder before use.

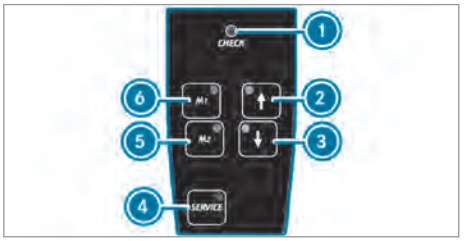

Electronic level control performs a self-check regularly when it is activated and while in use. Indicator lamp ① on the remote control lights up for approximately one second when you switch on either the ignition or electronic level control with button ④.

There is a malfunction if indicator lamp ① behaves in the following ways:

- the indicator lamp does not light up when you switch on the ignition or electronic level control

  or

- the indicator lamp does not go out after one second

  or

- the indicator lamp then lights up again or flashes

In addition, a warning tone is emitted from the remote control for approximately 30 seconds. The fault that has been detected can be shown using the indicator lamps (signaling of fault codes).

▶ Park the vehicle, leaving the ignition switched on.

▶ **To raise or lower the vehicle level:** press and hold button ② or ③ until the vehicle level reaches the required height.
The indicator lamp on button ② or ③ flashes as long as the vehicle level is being changed. When the vehicle level has been set, the indicator lamp on button ② or ③ lights up.

▶ **To lower automatically:** briefly press button ③.
Electronic level control automatically lowers the vehicle down to the lowest position.

The indicator lamp on button ③ flashes as long as the vehicle level is being changed. When the vehicle level has been set, the indicator lamp on button ③ lights up.

▶ To stop the movement, briefly press button ②.

▶ **To raise or lower to driving level:** briefly press button ② or ③.
Electronic level control automatically raises or lowers the vehicle to driving level.

The indicator lamp on button ② or ③ flashes as long as the vehicle level is being changed. When the vehicle level has been set, the indicator lamp on button ② or ③ lights up.

▶ To stop the movement, briefly press the other button.

▶ **To save the set vehicle level:** set the required vehicle level.

▶ Press and hold button ⑤ or ⑥ until you hear a tone.
The vehicle level set has been saved on corresponding button ⑤ or ⑥.

▶ **To call up the saved vehicle level:** briefly press button ⑤ or ⑥.
Electronic level control automatically raises or lowers the vehicle to the saved driving level.

The indicator lamp on button ⑤ or ⑥ flashes as long as the vehicle level is being changed. When the vehicle level has been set, the indicator lamp on button ⑤ or ⑥ lights up.

▶ To stop the movement, briefly press button ② or ③.

▶ **To switch on automatically:** drive at over 6.2 mph (10 km/h) or release the parking brake.
Electronic level control controls the vehicle level automatically.

▶ To stop the movement, briefly press button ② or ③.

Switching electronic level control off/on

▶ **To switch electronic level control off:** press button ④.
The indicator lamp on button ④ lights up.

▶ **To switch electronic level control on again:** press button ④ again.
The indicator lamp on button ④ goes out.

Using the button in the control panel

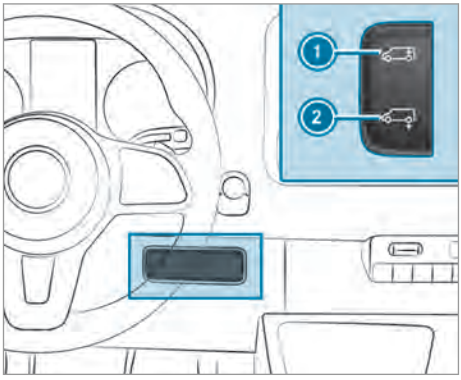

▶ Park the vehicle, leaving the ignition switched on.

▶ **To lower automatically:** briefly press the lower section of switch ②.
Electronic level control automatically lowers the vehicle.

▶ To stop the movement, briefly press the upper section of switch ①.

▶ **To raise to driving level:** briefly press the upper section of switch ①.
Electronic level control automatically raises the vehicle to the driving level.

▶ To stop the movement, briefly press the lower section of switch ②.

▶ **To switch on automatically:** drive at over 6.2 mph (10 km/h) or release the parking brake.
Electronic level control controls the vehicle level automatically.

Using electronic level control for charging with air in an emergency

Only for vehicles with valves for electronic level control emergency charging. If electronic level control is malfunctioning and the vehicle is leaning, you can raise or lower the vehicle by connecting an external compressed-air source to one of the emergency valves (tire valves). If electronic level control is deactivated, you can drive on carefully to the nearest qualified specialist workshop and have the malfunction remedied.

! NOTE Damage due to pressure being too high

If the pressure in the air suspension bellows is too high, the compressed-air lines or the air suspension bellows may be damaged.

▶ Ensure you observe the maximum permissible operating pressure of 600 kPa (6 bar/87 psi).

▶ Apply the parking brake.

▶ **Vehicles with automatic transmission:** shift the transmission to position P.

▶ Switch off electronic level control (→ page 123).

▶ Switch off the engine and open the hood (→ page 173).

▶ Unscrew the valve cap of the corresponding valve.

▶ Connect the external compressed-air source.

▶ Raise or lower the vehicle level by charging or releasing compressed air until the driving level has been reached and the vehicle is in a horizontal position. While doing so, ensure you observe the maximum permissible operating pressure of 600 kPa (6 bar/87 psi).

▶ Disconnect the external compressed-air source.

▶ Tighten the valve caps on the valves.

▶ Close the hood (→ page 173).

▶ Drive on carefully to the nearest qualified specialist workshop.

Problems with the electronic level control

Problem	Possible causes/consequences and ▶ Solutions
You cannot raise or lower the vehicle level when stationary.	The compressor is in danger of overheating. After repeatedly raising and lowering the vehicle, electronic level control (play protection) is deactivated. ▶ Try to set the vehicle level manually again after approximately one minute.
	Electric level control has been deactivated due to undervoltage. The battery may not be charging. Handling and ride comfort may suffer. ▶ Start the engine. ▶ Consult a qualified specialist workshop as soon as possible.

Refueling

Refueling the vehicle

WARNING Risk of fire or explosion from fuel

Fuels are highly flammable.

- ▶ Fire, open flames, smoking and creation of sparks must be avoided.
- ▶ Switch off the ignition and, if available, the stationary heater, before and while refueling the vehicle.

WARNING Risk of injury from fuels

Fuels are poisonous and hazardous to your health.

- ▶ Do not swallow fuel or let it come into contact with skin, eyes or clothing.
- ▶ Do not inhale fuel vapor.
- ▶ Keep children away from fuel.
- ▶ Keep doors and windows closed during the refueling process.

If you or other people come into contact with fuel, observe the following:

- ▶ Immediately rinse fuel off your skin with soap and water.
- ▶ If fuel comes into contact with your eyes, immediately rinse them thoroughly with clean water. Seek medical attention immediately.
- ▶ If you swallow fuel, seek medical attention immediately. Do not induce vomiting.
- ▶ Change immediately out of clothing that has come into contact with fuel.

WARNING Risk of fire or explosion from electrostatic charge

Electrostatic charge can create sparks and thereby ignite fuel vapors.

- ▶ Before opening the fuel filler cap or taking hold of the pump nozzle, touch the metallic body of the vehicle.
  This discharges any electrostatic charge that may have built up.
- ▶ Do not get into the vehicle again during the refueling process.
  Otherwise, electrostatic charge could build up again.

WARNING Risk of fire from fuel mixture

Vehicles with a diesel engine:

If you mix diesel fuel with gasoline, the flash point of the fuel mixture is lower than that of pure diesel fuel.

While the engine is running, component parts in the exhaust system may overheat without warning.

- ▶ Never refuel using gasoline.
- ▶ Never mix gasoline with diesel fuel.

NOTE Do not use diesel to refuel vehicles with a gasoline engine.

If you accidentally refuel with the wrong fuel:

- Do not switch the ignition on. Otherwise fuel can enter the engine.

  Even small amounts of the wrong fuel could result in damage to the fuel system and the engine. The repair costs are high.

▶ Consult a qualified specialist workshop.

▶ Have the fuel tank and fuel lines drained completely.

NOTE Do not use gasoline to refuel vehicles with a diesel engine.

If you accidentally refuel with the wrong fuel:

- Do not switch the ignition on. Otherwise, fuel can enter the fuel system.

  Even small amounts of the wrong fuel could result in damage to the fuel system and the engine. The repair costs are high.

▶ Consult a qualified specialist workshop.

▶ Have the fuel tank and fuel lines drained completely.

NOTE Damage to the fuel system caused by overfilled fuel tanks.

▶ Only fill the fuel tank until the pump nozzle switches off.

NOTE Fuel may spray out when you remove the fuel pump nozzle.

▶ Only fill the fuel tank until the pump nozzle switches off.

NOTE Damage to painted surfaces due to fuel

▶ Do not spill any fuel on painted surfaces.

ENVIRONMENTAL NOTE Environmental damage due to improper handling of fuel

If fuels are handled improperly, they pose a danger to persons and the environment.

▶ Do not allow fuels to run into the sewage system, the surface waters, the ground water or into the ground.

Requirements:

- The vehicle is unlocked.
- The auxiliary heating is deactivated.
- The ignition is switched off
- The front left-hand door is open.

ⓘ Do not get back into the vehicle during the refueling process. Otherwise, electrostatic charge could build up again.

Observe the notes on operating fluids (→ page 233).

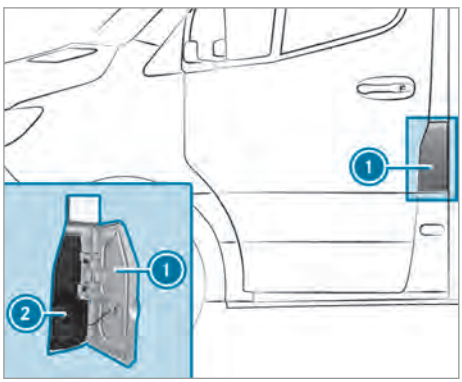

① Fuel filler flap

② Fuel filler cap

ⓘ The fuel filler flap is beside the front left-hand door when viewed in the direction of travel. The position of the fuel filler cap is also shown in the Instrument Display. The arrow on the filling pump specifies the side of the vehicle.

▶ Open fuel filler flap ①.

▶ Turn fuel filler cap ② counter-clockwise and remove it.

▶ Close all vehicle doors to prevent fuel vapors from entering the vehicle interior.

▶ Completely slide the filler neck of the pump nozzle into the tank, hook in place and refuel.

▶ Fill the fuel tank only until the pump nozzle switches off.

▶ Replace fuel filler cap ② and turn it clockwise.
You will hear a click when the fuel filler cap is closed fully.

▶ Open the front left-hand door.

▶ Close fuel filler flap ①.

ⓘ **Vehicles with a diesel engine and incorrect fueling protector against refueling with gasoline:** the filler neck is designed for refueling at diesel filling pumps for passenger vehicles.

ⓘ **Vehicles with a diesel engine without incorrect fueling protector:** you can also refuel at a diesel filling pump for trucks.

ⓘ If the fuel tank has been run completely dry, add at least 1.3 gal (5 l) of fuel.

Problems with the fuel and fuel tank

Problem	Possible causes/consequences and ▶ Solutions
Fuel is leaking from the vehicle.	The fuel line or the fuel tank is defective. ▶ Apply the parking brake. ▶ Switch off the engine. ▶ Remove the key from the ignition lock. Or, on vehicles with KEYLESS-GO: ▶ Open the driver's door. The on-board electronics are in position 0. This corresponds to the "key removed". ▶ Do not restart the engine under any circumstances. ▶ Consult a qualified specialist workshop.
The engine does not start.	The fuel tank has been run completely dry. ▶ Refuel the vehicle with at least 1.3 gal (5 l) of fuel. ▶ Switch the ignition on for approximately ten seconds. ▶ Start the engine continuously for a maximum of ten seconds until it runs smoothly. If the engine does not start: ▶ Switch the ignition on for approximately ten seconds. ▶ Start the engine continuously for a maximum of ten seconds until it runs smoothly. If the engine does not start after three attempts: ▶ Consult a qualified specialist workshop.

DEF

Notes on DEF

! **NOTE** When you open the DEF tank, small amounts of ammonia vapor may escape.

▶ Only fill the DEF tank in well-ventilated areas.

▶ Do not let DEF come into contact with skin, eyes or clothes.

▶ Keep DEF away from children.

! **NOTE** Do not ingest DEF.

If DEF is swallowed:

▶ Immediately rinse out your mouth thoroughly.

▶ Drink plenty of water.

▶ Seek medical attention immediately.

! **NOTE** Damage caused by additives in DEF or by diluting DEF

The DEF exhaust gas aftertreatment system could be destroyed by the following:

- Additives in DEF

- Diluting DEF

▶ Only use DEF in accordance with ISO 22241.

▶ Do not mix additives.

▶ Do not dilute DEF.

! NOTE Damage and malfunctions caused by impurities in DEF

Impurities in DEF result in the following:

- Higher emission values
- Damage to the catalytic converter
- Engine damage
- Malfunctions in the DEF exhaust gas aftertreatment system

▶ Avoid impurities in DEF.

! NOTE DEF residue crystallizes after some time. Remove DEF residue.

▶ Immediately rinse surfaces that come in contact with DEF when filling with water.

▶ DEF can also be removed with a damp cloth and cold water.

▶ If DEF has already crystallized, clean using a sponge and cold water.

DEF is a liquid urea solution used for exhaust gas aftertreatment of diesel engines. In order for the exhaust gas aftertreatment to function properly, only use DEF in accordance with ISO 22241.

DEF has the following properties:

- non-toxic
- colorless and odorless
- non-flammable

DEF availability:

- you can have DEF added by fast service at a qualified specialist workshop, e.g. an authorized Mercedes-Benz Center.
- DEF is available at numerous gas stations via DEF filling pumps.
- alternatively, DEF is available at qualified specialist workshops, e.g. an authorized Mercedes-Benz Center, and at numerous gas stations as a DEF refill canister or DEF refill bottle.

ⓘ DEF freezes at a temperature of approximately 12.2 °F (-11 °C). The vehicle is equipped with a DEF preheating system at the factory. This means that winter operation is also ensured for temperatures below 12.2 °F (-11 °C). If you add DEF at temperatures below 12.2 °F (-11 °C), the DEF level in the instrument cluster may not be displayed correctly. If the DEF is frozen, drive for at least 20 minutes and then park the vehicle for a minimum of 30 seconds, so that the level is correctly displayed. In extreme winter conditions, the time needed to detect the top-up amount may be considerably longer. Park the vehicle in a warm garage to speed up this process.

ⓘ Ensure the connection between the refill container and vehicle filler neck does not drip.

Calling up the DEF range and DEF level gauge

On-board computer:

→ Service

▶ Select DEF and confirm.
The DEF fill level and the DEF range appear.

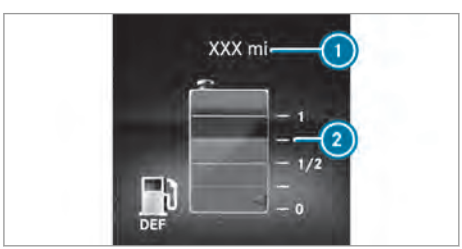

Instrument Display with color display

1. DEF range
2. DEF fill level

Instrument Display with black and white display

1. DEF fill level
2. DEF range

Adding DEF

NOTE Engine damage due to DEF being in the fuel

- ▶ DEF must not be used to fill the fuel tank.
- ▶ Only use DEF to fill the DEF tank.
- ▶ Do not overfill the DEF tank.

NOTE Contamination of the vehicle interior due to DEF leakage

- ▶ After adding, carefully close the DEF refill container.
- ▶ Avoid carrying DEF refill containers permanently in the vehicle.

Requirements:

- The ignition is switched off

The following messages that appear in succession in the multifunction display indicate that you need to refill the DEF tank:

- Refill Additive See Operator's Manual

  The DEF tank has fallen below the first warning threshold.
- Refill Additive Starts until Emerg. Op.: XXX See Operator's Manual

  The DEF supply has fallen below the reserve mark.

  After the message appears for the first time, the remaining DEF supply will last for approximately 1,200 miles (1,900 km). The engine can then only be started another 16 times. The number of remaining engine starts XX (16 to 1) is shown in the message every time the engine is started.
- Refill Additive Emergency Op.: XXX mph See Operator's Manual

  You can only drive the vehicle at a maximum speed of 5 mph (8 km/h).

You can also have the DEF fill level and the DEF range displayed (→ page 128).

Opening the DEF filler cap on filler caps that are not lockable

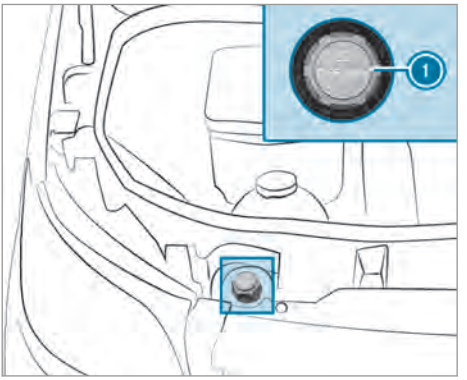

- ▶ Open the hood.
- ▶ Turn DEF filler cap ① counter-clockwise and remove it.

Opening the DEF filler cap on lockable filler caps

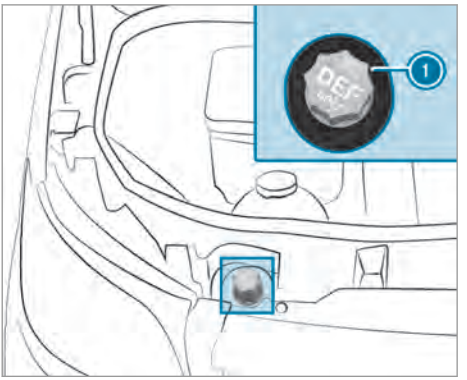

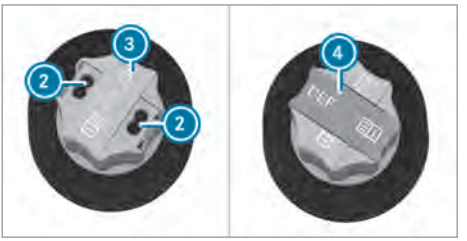

- ▶ Open the hood.
- ▶ Take tool ④ for unlocking DEF filler cap ① from the vehicle tool kit.

- Pull cover ③ on DEF filler cap ① up, turn 90° and release.
- Insert tool ④ in holes ② of DEF filler cap ①.
- Turn DEF filler cap ① counter-clockwise and remove it.

Preparing the DEF refill canister

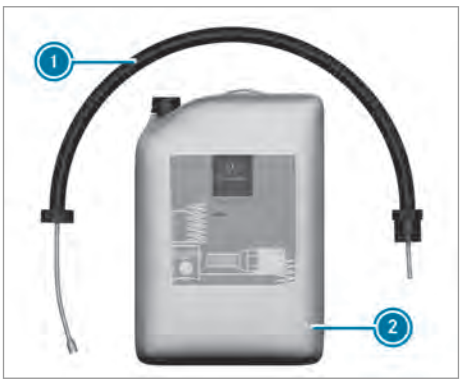

Variant 1

Variant 2

- Unscrew the cap on DEF refill canister ②.
- Screw disposable hose ① onto the opening of DEF refill canister ② until hand-tight.

Adding DEF

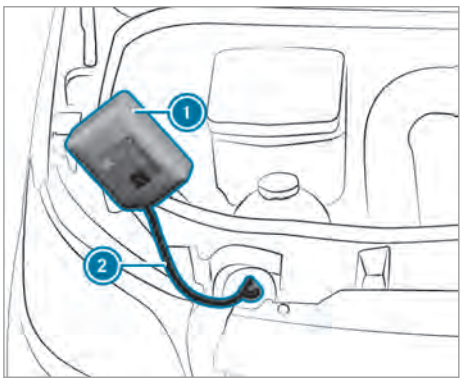

Variant 1

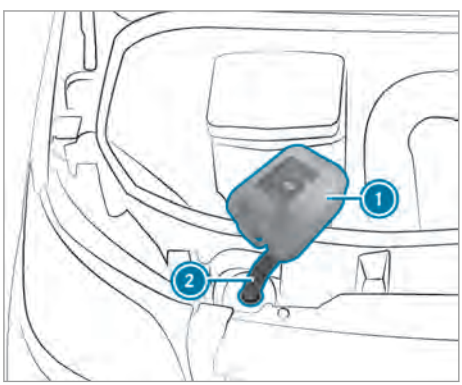

Variant 2

- Screw disposable hose ② onto the filler neck of the vehicle until hand-tight.
- Lift up and tip DEF refill canister ①.
  The filling process stops when the DEF tank is completely full.

  DEF refill canister ① can be removed when it has been only partially emptied.
- Unscrew disposable hose ② and close DEF refill canister ① in reverse order.
- Switch on the ignition for at least 60 seconds.
- Start the vehicle.

ⓘ Avoid storing DEF containers permanently in the vehicle.

DEF refill bottle

Only screw the DEF refill bottle hand-tight onto the filler opening in the engine compartment. It may otherwise be damaged.

DEF refill bottles (1) can be obtained at many gas stations or at a qualified specialist workshop. Refill bottles without a threaded cap offer no overfill protection. DEF may leak out as a result of overfilling. Mercedes-Benz offers special refill bottles with a threaded cap. These are available at any authorized Mercedes-Benz Center.

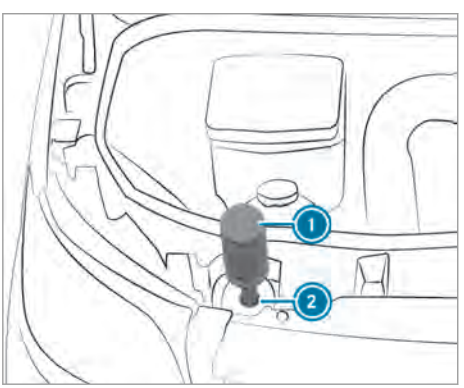

- Unscrew the protective cap from DEF refill bottle (1).
- Place DEF refill bottle (1) as shown on filler opening (2) and screw it on clockwise until hand-tight.
- Press DEF refill bottle (1) towards filler opening (2).
  The DEF tank is filled. This could take up to one minute.

(i) When the DEF refill bottle is no longer pressed down, filling stops. The bottle can be removed when it has been only partially emptied.

- Release DEF refill bottle (1).
- Turn DEF refill bottle (1) counter-clockwise and remove it.
- Screw the protective cap onto DEF refill bottle (1) again.

Filling procedure with the pump nozzle of an DEF filling pump

- Insert the pump nozzle into the filler neck and add DEF. When doing so, do not overfill the DEF tank.

Closing the DEF filler cap on filler caps that are not lockable

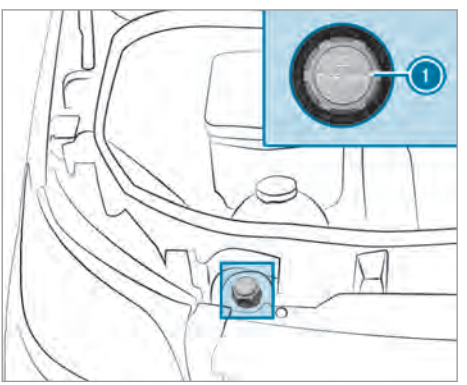

- After filling the DEF tank, place DEF filler cap (1) on the filler neck and tighten it clockwise.
- Turn the DEF filler cap until the lettering is legible and horizontal.
  The filler neck is only locked correctly when this is the case.
- Close the hood.

Closing the DEF filler cap on lockable filler caps

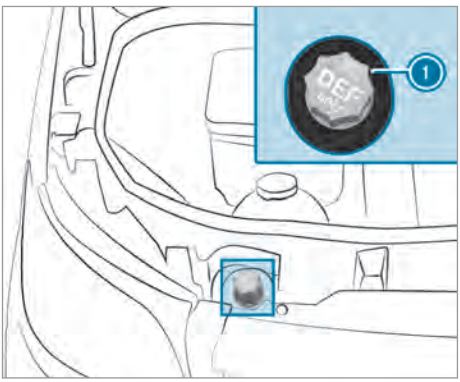

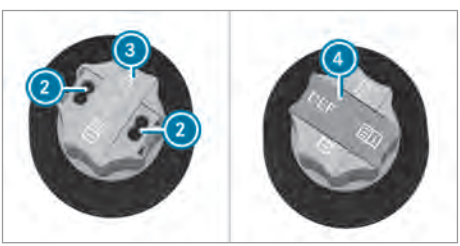

- After filling the DEF tank, place DEF filler cap (1) on the filler neck and tighten it clockwise.
- Remove tool (4) from DEF filler cap (1) and store it in the vehicle tool kit.
- Pull cover (3) on DEF filler cap (1) up over holes (2) of DEF filler cap (1), turn and release.
- Turn DEF filler cap (1).
  If DEF filler cap (1) turns freely, the DEF tank is closed.

Parking

Parking the vehicle

WARNING Risk of fire caused by hot exhaust system parts

Flammable material such as leaves, grass or twigs may ignite if they come into contact with hot parts of the exhaust system or exhaust gas flow.

- Park the vehicle so that no flammable material can come into contact with hot vehicle components.
- In particular, do not park on dry grassland or harvested grain fields.

WARNING Risk of accident and injury due to children left unattended in the vehicle

If children are left unattended in the vehicle, they could:

- open doors, thereby endangering other persons or road users.
- get out of the vehicle and be hit by oncoming traffic.
- operate vehicle equipment and become trapped, for example.

In addition, children could also set the vehicle in motion, for example, by:

- releasing the parking brake.
- shifting the automatic transmission out of park position P.
- starting the engine

- Never leave children and animals unattended in the vehicle.
- When leaving the vehicle, always take the SmartKey with you and lock the vehicle.
- Keep the SmartKey out of the reach of children.

NOTE Damage to the vehicle or the drivetrain due to rolling away

- Always park your vehicle safely and according to legal requirements.
- Always properly secure the vehicle against rolling away.

WARNING Risk of accident and injury if parking brake is not applied

If you park the vehicle with the transmission in park position P and the parking brake is not engaged, the vehicle may roll away.

Engaging park position P is not a fully adequate replacement for the parking brake.

There is a risk of accident and injury.

- Secure the vehicle against rolling away as described below.

Observe the following points to ensure that the vehicle is properly secured against rolling away unintentionally:

- Always apply the parking brake.
- **Vehicles with automatic transmission:** engage transmission position P.
- **On uphill or downhill inclines:** turn the front wheels towards the curb.
- **On uphill or downhill inclines:** secure the rear axle with a chock or an object without sharp edges.

ⓘ You can operate the side windows for five minutes after you have switched off the vehicle.

Manual parking brake

Applying/releasing the handbrake lever

WARNING Risk of skidding or an accident by braking with the parking brake

If you have to brake your vehicle with the parking brake, the braking distance is considerably longer and the wheels may lock. There is an increased risk of skidding and/or accident.

- Only brake the vehicle with the parking brake if the service brake has failed.
- In this case, do not apply the parking brake with too much force.
- If the wheels lock, immediately release the parking brake as much as required for the wheels to turn again.

WARNING Risk of fire and an accident if the parking brake is not released

If the parking brake is not fully released when driving, the following situations can occur:

- The parking brake can overheat and cause a fire
- The parking brake can lose its holding function

- Completely release the parking brake before driving off.

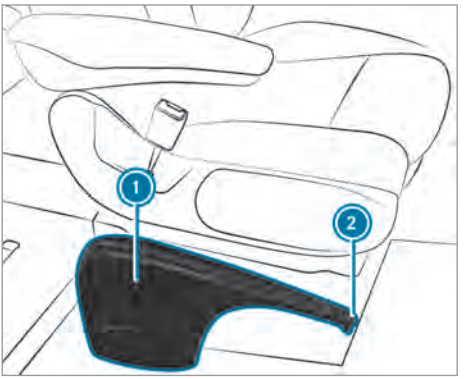

The brake lights do not light up when you brake the vehicle with the parking brake.

Generally, you may only apply the parking brake when the vehicle is stationary.

- **To apply the parking brake:** pull handbrake lever 1 up as far as the last possible detent. When the engine is running, the PARK and (P) (USA) or (P) (Canada) indicator lamps in the Instrument Display light up. If the vehicle is in motion, a warning tone sounds.

ⓘ In vehicles with a folding handbrake lever, you can then press handbrake lever 1 down as far as it will go.

- **To release the parking brake:** on vehicles with a folding handbrake lever, first pull handbrake lever 1 up as far as it will go.
- Pull handbrake lever 1 slightly and press release knob 2.
- Guide handbrake lever 1 down to as far as it will go.
  The PARK and (P) (USA) or (P) (Canada) indicator lamps in the Instrument Display go out.

Folding the handbrake lever up or down (only in vehicles with a folding handbrake lever)

Requirements:

- The handbrake lever is applied.

- **To fold down the handbrake lever:** push the handbrake lever down as far as it will go.
- **To raise the handbrake lever:** pull the handbrake lever up as far as it will go.

Performing emergency braking with the handbrake lever

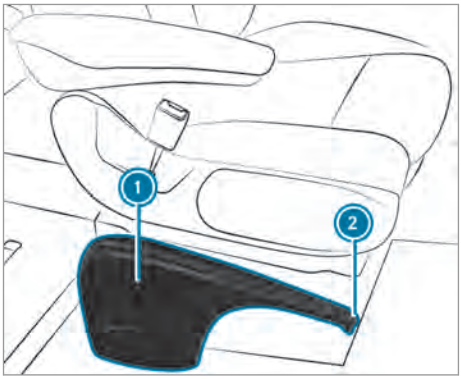

If, in exceptional cases, the service brake fails, you may use the parking brake to perform emergency braking.

▶ **Emergency braking:** press and hold release button ② and carefully pull brake lever ①.

Electric parking brake

Notes on the electric parking brake

⚠ **WARNING** Risk of accident and injury due to children and animals left unattended in the vehicle

If you leave children and animals unattended in the vehicle, they may be able to set the vehicle in motion, for example by:

- Releasing the parking brake.
- Shifting the automatic transmission out of park position P.
- Starting the engine.

In addition, they may operate vehicle equipment and become trapped.

▶ Never leave children and animals unattended in the vehicle.

▶ When leaving the vehicle, always take the SmartKey with you and lock the vehicle.

For the automatic functions to work correctly, the driver must be seated in the correct seat position (→ page 59).

The function of the electric parking brake is dependent on the on-board electrical system voltage. If the on-board electrical system voltage is low or there is a malfunction in the system, it may not be possible to apply the electric parking brake and the yellow (P) indicator lamp lights up.

In this case, park the vehicle in the following way:

- Park the vehicle on level ground and secure it to prevent it from rolling away.
- **Vehicles with automatic transmission:** shift the transmission to position P.

ⓘ The electric parking brake is only actually applied when the red PARK and (P) (USA) or (P) (Canada) indicator lamps light up continuously.

It may not be possible to release a parking brake if the on-board electrical system voltage is low or if there is a malfunction in the system. Inform a qualified specialist workshop. When the engine is switched off, the electric parking brake carries out a function test at regular intervals. Noises are normal in this process.

Automatically applying the electric parking brake

Vehicles with automatic transmission:

The electric parking brake is automatically applied when the transmission is in position P.

In addition, at least one of the following conditions must be fulfilled:

- the engine is switched off
- the driver is not sitting in the driver's seat
- the belt buckle is undone

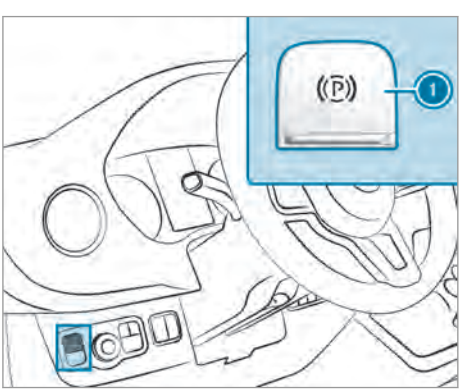

To prevent the electric parking brake from applying automatically, pull switch ①.

The electric parking brake is also automatically applied if Active Distance Assist DISTRONIC has brought the vehicle to a standstill.

In addition, at least one of the following conditions must be fulfilled:

- the engine is switched off
- the driver is not sitting in the driver's seat
- the belt buckle is undone
- there is a system malfunction
- the power supply is insufficient
- the vehicle is stationary for a long time

The red PARK and (P) (USA) or (P) (Canada) indicator lamp in the instrument display lights up. The electric parking brake is only actually applied when the red PARK and (P) (USA) or (P) (Canada) indicator lamps light up continuously.

Releasing the electric parking brake automatically
Vehicles with automatic transmission:

The electric parking brake of your vehicle is released when all of the following conditions are fulfilled:

- The driver is sitting in the driver's seat.
- The driver is belted.
- The engine is running.
- The transmission is in position D or R and you depress the accelerator

  or

  You switch from transmission position P to position D or R. You must also depress the accelerator if traveling on steep uphill gradients.
- If the transmission is in position R, the rear-end doors must be closed.

Applying/releasing the electric parking brake manually

WARNING Risk of accident and injury due to children and animals left unattended in the vehicle

If you leave children and animals unattended in the vehicle, they may be able to set the vehicle in motion, for example by:

- Releasing the parking brake.
- Shifting the automatic transmission out of park position P.
- Starting the engine.

In addition, they may operate vehicle equipment and become trapped.

▶ Never leave children and animals unattended in the vehicle.

▶ When leaving the vehicle, always take the SmartKey with you and lock the vehicle.

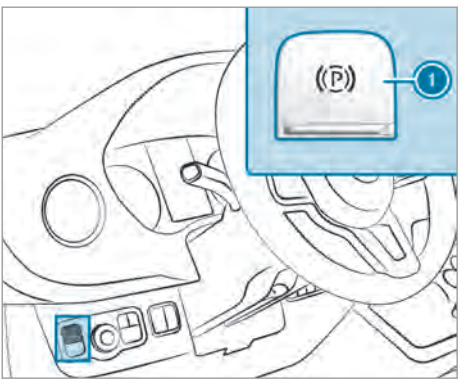

▶ **To apply:** press switch 1.
When the electric parking brake is applied, the red PARK and (P) (USA) or (P) (Canada) indicator lamps light up in the instrument display. The electric parking brake is only actually applied when the red PARK and (P) (USA) or (P) (Canada) indicator lamps light up continuously.

It is also possible to apply the electric parking brake when the ignition is switched off.

▶ **To release:** pull switch 1.
The red PARK and (P) (USA) or (P) (Canada) indicator lamps in the instrument display go out.

You may only release the electric parking brake if the ignition is switched on with the start/stop button.

Emergency braking

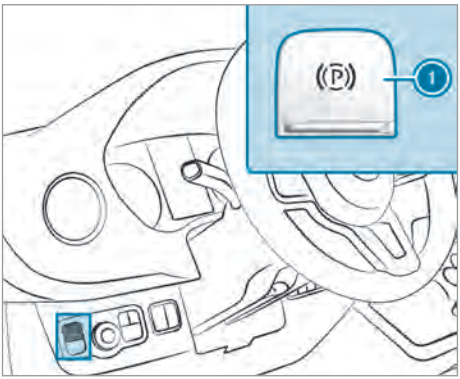

In the event of an emergency, you can brake the vehicle while it is in motion with the electric parking brake.

▶ While driving, press switch ① of the electric parking brake.
The vehicle is braked as long as you keep switch ① of the electric parking brake depressed.

The longer electric parking brake switch ① is depressed, the greater the braking force.

During the braking procedure, you will receive the following feedback from the vehicle:

- a warning tone sounds
- the "Release parking brake" display message appears
- the red PARK and (P) (USA) or (P) (Canada) indicator lamps in the Instrument Display flash

When the vehicle has been braked to a standstill, the electric parking brake is applied.

Parking the vehicle for an extended period

Parking the vehicle for longer than four weeks

▶ **Method 1:** connect the batteries to a trickle charger.

▶ **Method 2:** disconnect the vehicle starter battery.

▶ **Method 3:** switch off the power supply using the battery main switch and disconnect the auxiliary battery on the vehicle.

▶ **Method 4:** interrupt the power supply by activating standby mode (→ page 136).

The charge level of the battery must be checked every three weeks if no measures are taken to maintain the battery charge.

▶ **Battery voltage below 12.2 V:** charge the battery to prevent deep discharge damage.

ⓘ Further information can be obtained at a qualified specialist workshop.

Standby mode

Activating/deactivating standby mode

Requirements:

- the engine is switched off.

On-board computer:

→ Settings ▸▸ Vehicle
▸▸ Ruhezustand (Standby)

▶ **To activate/deactivate:** select Yes or No.

Driving and driving safety systems

Note on driving systems and your responsibility

Your vehicle is equipped with driving systems which assist you in driving, parking and maneuvering the vehicle. The driving systems are aids and do not relieve you of your responsibility. Always pay attention to the traffic and intervene if necessary. Be aware of the limitations regarding the safe use of these systems.

Information about sensors

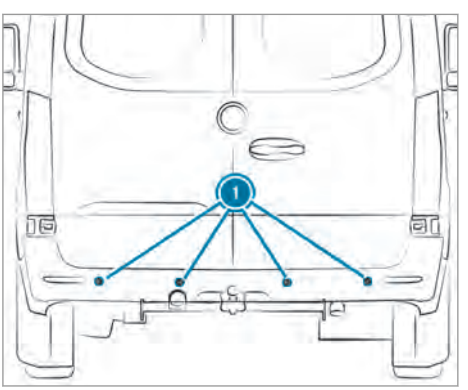

Certain driving and driving safety systems use sensors ① to monitor the area in front of, behind or next to the vehicle (depending on the vehicle's equipment).

Depending on the vehicle's equipment, the radar sensors are integrated behind the bumpers and/or behind the radiator grill. Keep these parts free of dirt, ice and slush (→ page 183). The sensors must not be covered, for example by bicycle racks, overhanging loads or stickers. After a collision, have the function of the radar sensors checked at a qualified specialist workshop as damage (both visible or non-visible) may have occurred to the bumper or radiator trim.

Function of driving systems and driving safety systems

In this section, you will find information about the following driving systems and driving safety systems:

- ABS (**A**nti-lock **b**raking **s**ystem) (→ page 137)
- ASC (**A**cceleration **S**kid **C**ontrol) (→ page 137)
- BAS (**B**rake **A**ssist **S**ystem) (→ page 137)
- ESP® (**E**lectronic **S**tability **P**rogram) (→ page 138)
- EBD (**E**lectronic **B**rakeforce **D**istribution) (→ page 139)
- Active Brake Assist (→ page 139)
- Cruise control (→ page 141)
- Active Distance Assist DISTRONIC (→ page 142)
- Hill start assist
- HOLD function (→ page 145)
- Parking Assist PARKTRONIC
- Rear view camera
- 360° Camera
- ATTENTION ASSIST (→ page 146)
- Blind Spot Assist (→ page 147)
- Active Lane Keeping Assist (→ page 150)

Functions of ABS (Anti-lock Braking System)

Observe the important safety guidelines for the driving safety system.

ABS controls the brake pressure in critical situations:

- the wheels are prevented from locking when braking, e.g. during maximum full-stop braking or when there is insufficient tire traction.
- the steerability of the vehicle in terms of physical possibilities is ensured when braking.
- ABS is active from speeds of approx. 3 mph (5 km/h). On a slippery road surface, ABS intervenes even if you only brake gently.

System limitations

If there is a malfunction and the yellow ABS warning lamp lights up continuously in the instrument display after starting the engine, ABS may be impaired or inoperative.

If ABS intervenes, you will feel a pulsing in the brake pedal. The pulsating brake pedal may be an indication of hazardous road conditions and functions as a reminder to take extra care while driving.

If ABS intervenes: keep the brake pedal firmly depressed until the braking situation has passed.

To carry out maximum full-stop braking: depress the brake pedal with full force.

Function of BAS (Brake Assist System)

⚠ **WARNING** Risk of an accident caused by a malfunction in BAS (Brake Assist System)

If BAS is malfunctioning, the braking distance in an emergency braking situation is increased.

▶ Depress the brake pedal with full force in emergency braking situations. ABS prevents the wheels from locking.

BAS supports you with additional braking force in an emergency braking situation.

If you depress the brake pedal quickly, BAS is activated:

- BAS automatically boosts the braking force of the brakes
- BAS can shorten the braking distance
- ABS prevents the wheels from locking

When you release the brake pedal, the brakes function as usual again. BAS is deactivated.

Functions of ASR (Acceleration Skid Control)

ASR can neither reduce the risk of an accident nor override the laws of physics if the driver does not pay attention when pulling away or accelerating. ASR is only an aid. Always adapt your driving

style to suit the prevailing road and weather conditions.

If you activate or deactivate the all-wheel drive in a vehicle with this option, ASR will be deactivated for the duration of the activation/deactivation process.

Vehicles without steering wheel buttons: if ASR is malfunctioning, the [ ] indicator lamp lights up while the engine is running and the engine output may be reduced (→ page 23).

ASR improves traction, i.e. the transfer of power from the tires to the road surface, for a sustained period and, thereby, also improves the driving stability of the vehicle. If the driving wheels start to spin, ASR brakes individual drive wheels and limits the engine torque. ASR thus significantly assists you when pulling away and accelerating, especially on wet or slippery roads.

If traction on the road surface is not sufficient, even ASR will not allow you to pull away without difficulty. The type of tires and total weight of the vehicle as well as the gradient of the road also play a crucial role.

If ASR intervenes, the [ ] warning lamp in the instrument display flashes.

Functions of ESP® (Electronic Stability Program)

⚠ **WARNING** Risk of skidding if ESP® is malfunctioning

If ESP® is malfunctioning, ESP® cannot carry out vehicle stabilization. In addition, other driving safety systems are switched off.

▶ Drive on carefully.

▶ Have ESP® checked at a qualified specialist workshop.

⚠ **WARNING** Risk of skidding if ESP® is deactivated

If you deactivate ESP®, ESP® cannot carry out vehicle stabilization.

▶ ESP® should only be deactivated in the following situations.

Do not operate the vehicle on a roller dynamometer (e.g. for a performance test). If you have to operate the vehicle on a roller dynamometer, consult a qualified specialist workshop beforehand.

If you activate or deactivate the all-wheel drive in a vehicle with this option, ESP® will be deactivated for the duration of the activation/deactivation process.

If ESP® is malfunctioning or deactivated, the [ ] warning lamp lights up while the engine is running and the engine output may be reduced (→ page 23).

ⓘ Only use wheels with the recommended tire sizes. Only then will ESP® function properly.

Activating/deactivating ESP® (Electronic Stability Program)

On-board computer:

→ Settings ▸▸ DriveAssist ▸▸ ESP (ESP)

▶ Select Ein (On) or Aus [OFF] (Off).

Functions of ESP® Crosswind Assist

Crosswind Assist does not work if ESP® is deactivated or disabled due to a malfunction.

Crosswind Assist does not react under the following conditions:

- The vehicle is subjected to severe jolts and vibrations, e.g. as a result of uneven surfaces or potholes.
- The vehicle loses traction, e.g. on snow or ice or when hydroplaning.
- The driver is performing sudden and large steering movements.

Crosswind Assist is operational again as soon as the driving conditions return to normal.

Crosswind Assist detects strong crosswind gusts that can impair ability of your vehicle to drive straight ahead. Crosswind Assist intervenes depending on the direction and strength of the crosswind.

A stabilizing brake application helps you to keep the vehicle on track.

Information is shown in the instrument cluster in the event of a clearly discernible intervention by Crosswind Assist.

Crosswind Assist is active above a vehicle speed of 50 mph (80 km/h) when the vehicle is driving straight ahead or cornering gently.

Function of ESP® trailer stabilization

⚠ **WARNING** Risk of accident in poor road and weather conditions

In poor road and weather conditions, the trailer stabilization cannot prevent lurching of the vehicle/trailer combination. Trailers with a high center of gravity may tip over before ESP® detects this.

▶ Always adapt your driving style to suit the current road and weather conditions.

ESP® trailer stabilization counteracts critical driving situations in good time and thereby provides considerable assistance when driving with a trailer. Trailer stabilization is part of ESP®.

If the sensor system and evaluation logic detect trailer swinging movements, ESP® trailer stabilization initially brakes individual vehicle wheels in a targeted manner. It thus counteracts swinging movements. If the swinging movements do not stop, the vehicle is braked until the vehicle/trailer combination is stabilized. If necessary, the vehicle's engine output is limited.

If your vehicle with trailer (vehicle/trailer combination) starts to swerve, you are able to stabilize the vehicle/trailer combination only by braking. ESP® trailer stabilization helps you to stabilize the vehicle/trailer combination in this situation.

ESP® trailer stabilization is active above speeds of 40 mph (65 km/h).

If ESP® is deactivated because of a malfunction, trailer stabilization will not function.

Function of EBD (electronic brake force distribution)

EBD has the following characteristics:

- monitoring and controlling the braking force on the rear wheels
- improving driving stabilization when braking, especially on bends

Function of Active Brake Assist

Active Brake Assist consists of the following functions:

- Distance warning function
- Autonomous braking function
- Situation-dependent braking assistance

Active Brake Assist can help you to minimize the risk of a collision with vehicles or pedestrians or to reduce the effects of such a collision.

If Active Brake Assist has detected a risk of collision, you will be warned visually and acoustically.

If you do not react to the visual or acoustic warning, autonomous braking can be initiated in critical situations.

If there are pedestrians and cyclists crossing: in especially critical situations, Active Brake Assist can initiate autonomous braking directly. In this case, the visual and acoustic warning occurs simultaneously with the braking application.

If you apply the brake yourself in a critical situation, or apply the brakes during autonomous braking, situation-dependent braking assistance occurs. The brake pressure increases up to maximum full-stop braking if necessary. Situation-dependent braking assistance only intervenes when the brakes are applied firmly; otherwise, it remains within the autonomous braking process.

⚠ **WARNING** Risk of accident caused by limited detection performance of Active Brake Assist

Active Brake Assist cannot always clearly identify objects and complex traffic situations.

Due to the nature of the system, complex driving conditions may also cause Brake Assist to intervene or not intervene without reason. In such cases, and in the event of Active Brake Assist malfunctioning, the brake system will continue to be available with full brake boost and BAS.

▶ Always pay careful attention to the traffic situation; do not rely on Active Brake Assist alone. Active Brake Assist is only an aid. The driver of the vehicle is responsible for keeping a sufficiently safe distance to the vehicle in front, for vehicle speed and for braking in good time.

▶ Be prepared to brake or swerve if necessary.

Also observe the system limitations of Active Brake Assist.

The individual subfunctions are available in the following speed ranges:
Distance warning function

The distance warning function warns you at speeds greater than approximately 4 mph (7 km/h), if your vehicle is critically close to a vehicle or pedestrian.

An intermittent warning tone sounds and the distance warning lamp lights up in the instrument cluster.

Brake immediately or take evasive action, provided it is safe to do so and the traffic situation allows this.

The distance warning function can aid you in the following situations with an intermittent warning tone and a warning lamp:

Vehicles traveling in front	Stationary vehicles	Crossing vehicles	Crossing pedestrians/cyclists	Stationary pedestrians
Up to approx. 155 mph (250 km/h)	Up to approx. 124 mph (200 km/h)	No reaction	Up to approx. 37 mph (60 km/h)	No reaction

Autonomous braking function
The autonomous braking function may intervene at speeds starting from approximately 4 mph (7 km/h) in the following situations:

Vehicles traveling in front	Stationary vehicles	Crossing vehicles	Crossing pedestrians/cyclists	Stationary pedestrians
Up to approx. 155 mph (250 km/h)	Up to approx. 124 mph (200 km/h)	No reaction	Up to approx. 37 mph (60 km/h)	No reaction

Situation-dependent braking assistance
Situation-dependent braking assistance may intervene at speeds starting from approximately 4 mph (7 km/h) in the following situations:

Vehicles traveling in front	Stationary vehicles	Crossing vehicles	Crossing pedestrians/cyclists	Stationary pedestrians
Up to approx. 155 mph (250 km/h)	Up to approx. 50 mph (80 km/h)	No reaction	Up to approx. 37 mph (60 km/h)	No reaction

Canceling a brake application of Active Brake Assist

You can cancel a brake application of Active Brake Assist at any time by:

- Fully depressing the accelerator pedal or with kickdown.
- Fully releasing the brake pedal (only during situation-dependent braking assistance).

Active Brake Assist may cancel the brake application when one of the following conditions is fulfilled:

- You maneuver to avoid the obstacle.
- There is no longer a risk of collision.
- An obstacle is no longer detected in front of your vehicle.

System limitations

The system may be impaired or may not function in the following situations:

- The sensors are affected by snow, rain, fog or heavy spray.
- The sensors are dirty, fogged up, damaged or covered.
- The sensors are affected by interference from other radar sources, e.g. strong radar reflections in parking garages.
- If a loss of tire pressure or a defective tire has been detected and displayed.
- Full system performance is not available for a few seconds after switching on the ignition or after driving off.

The system may not react correctly in the following situations:

- In complex traffic situations, objects may not always be clearly detected.
- Pedestrians or vehicles move quickly into the detection range of the sensors.
- Pedestrians are obscured by other objects.
- In bends with a narrow radius.

Setting Active Brake Assist

Requirements:

- The ignition is switched on

On-board computer:

Settings ▸▸ DriveAssist ▸▸ Aktiver Brems-Assistent (Active Brake Assist)

The following settings are available:

- Early
- Medium
- Late

▶ Select a setting.

ⓘ After the ignition has been switched off and then back on again, Medium is set by default.

Cruise control

Function of cruise control

Cruise control accelerates and brakes the vehicle automatically in order to maintain a previously stored speed.

If you accelerate to overtake, for example, the stored speed is not deleted. If you remove your foot from the accelerator pedal after overtaking, cruise control will resume speed regulation back to the stored speed.

Cruise control is operated using the corresponding steering wheel buttons. You can store any road speed above 15 mph (20 km/h).

If you fail to adapt your driving style, cruise control can neither reduce the risk of an accident nor override the laws of physics. It cannot take into account road, weather or traffic conditions. Cruise control is only an aid. You are responsible for the distance to the vehicle in front, for vehicle speed, braking in good time and for staying in your lane.

Displays in the multifunction display

The status of cruise control and the stored speed are shown in the multifunction display.

Display in the Instrument Display (color display)

1. Cruise control is selected
2. Set speed gray: speed is stored, cruise control is deactivated
3. Set speed green: speed is stored, cruise control is activated

System limitations

Cruise control may be unable to maintain the stored speed on uphill gradients. The stored speed is resumed when the gradient evens out.

On long and steep downhill gradients, you should change down to a lower gear in good time. Take particular note of this when driving a laden vehicle. By doing so, you will make use of the engine's braking effect. This relieves the load on the brake system and prevents the brakes from overheating and wearing too quickly.

Do not use cruise control in the following situations:

- In traffic situations where frequent speed changes are required, e.g. in heavy traffic or on winding roads.

- On slippery roads. Accelerating can cause the drive wheels to lose traction and the vehicle could then skid.
- If you are driving when visibility is poor.

Operating cruise control

> ⚠ **WARNING** Risk of accident due to stored speed
>
> If you call up the stored speed and this is lower than your current speed, the vehicle decelerates.
>
> ▶ Take into account the traffic situation before calling up the stored speed.

Requirements:

- ESP® is activated, but may not intervene.
- The driving speed is at least 15 mph (20 km/h).

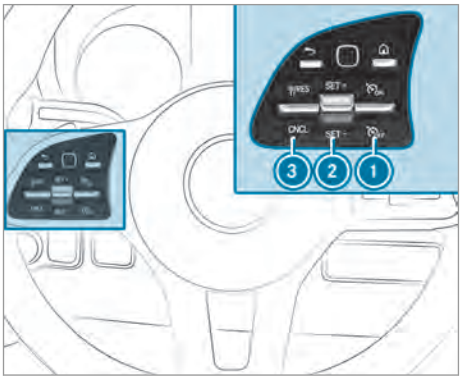

▶ **To activate cruise control:** push rocker switch ① up.

▶ Remove your foot from the accelerator pedal. The current speed is then saved and maintained by the vehicle.

▶ Push rocker switch ① up.

▶ **To increase/reduce speed:** push rocker switch ② up or down.
The stored speed is increased or reduced by 1 mph (1 km/h).

or

▶ Press rocker switch ② up or down and hold.
The stored speed is increased or reduced in 1 mph (1 km/h) increments.

or

▶ Push rocker switch ② beyond the pressure point.
The stored speed is increased or reduced by 5 mph (10 km/h).

or

▶ Push rocker switch ② beyond the pressure point and hold.
The stored speed is increased or reduced in 5 mph (10 km/h) increments.

or

▶ Accelerate the vehicle to the desired speed.

▶ Push rocker switch ② up.

If cruise control is activated and Traffic Sign Assist has detected a speed restriction sign with a maximum permissible speed and this appears in the instrument display:

▶ **To adopt the detected speed:** push rocker switch ③ up.
The maximum permissible speed shown by the traffic sign is stored and the vehicle maintains this speed.

▶ **To deactivate cruise control:** push rocker switch ③ (CNCL) down.

If cruise control is deactivated, it can be reactivated as follows:

- rocker switch ② (SET+) or (SET-) stores the current speed and the vehicle maintains this speed
- rocker switch ③ (RES) calls up the last speed stored and the vehicle maintains this speed

ⓘ If you brake, deactivate ESP® or if ESP® intervenes, cruise control is deactivated.
When you switch off the vehicle, the last speed stored is cleared.

Setting the speed limitation for winter tires

On-board computer

→ Settings ▸▸ Fahrzeug (Vehicle) ▸▸ Winter Tires Limit

▶ Select a speed or deactivate the function.

Active Distance Assist DISTRONIC

Function of Active Distance Assist DISTRONIC

Active Distance Assist DISTRONIC maintains the set speed on free-flowing roads. If vehicles ahead are detected, the set distance is maintained, if necessary until the vehicle comes to a halt. The vehicle accelerates or brakes depending on the distance to the vehicle in front and the set speed. Speed and distance are set and stored on the

steering wheel. The speed can be set in the range between 15 mph (20 km/h) and 99 mph (160 km/h) or between 15 mph (20 km/h) and the vehicle's maximum speed.

Other features of Active Distance Assist DISTRONIC:

- Depending on the preselected distance, DISTRONIC intervenes either dynamically (short distance) or to save fuel (long distance).
- Depending on the vehicle mass detected, the dynamics of the DISTRONIC intervention are reduced.
- Rapid acceleration to the stored speed is initiated if the turn signal indicator is switched on to change to the overtaking lane.

Active Distance Assist DISTRONIC is only an aid. The driver is responsible for the distance to the vehicle in front, for vehicle speed and for braking in good time.

System limitations

The system may be impaired or may not function in the following instances:

- The radar sensors are affected by snow, rain, fog, heavy spray, glare, direct sunlight or greatly varying ambient light.
- The radar sensors may malfunction in parking garages or on roads with steep uphill or downhill gradients.
- If the radar sensors are dirty or covered.
- On icy or slippery roads, braking or accelerating can cause the drive wheels to lose traction and the vehicle could then skid.
- Stationary objects are not detected if these were not previously detected as moving.
- On bends, target vehicles may be lost or not recognized correctly. As a result, a target vehicle is not used to regulate the speed which may lead to unwanted acceleration.

Do not use Active Distance Assist DISTRONIC in these situations.

WARNING Risk of accident from acceleration or braking by Active Distance Assist DISTRONIC

Active Distance Assist DISTRONIC may accelerate or brake in the following cases, for example:

- If the vehicle pulls away using Active Distance Assist DISTRONIC.
- If the stored speed is called up and is considerably faster or slower than the currently driven speed.
- If Active Distance Assist DISTRONIC no longer detects a vehicle in front or does not react to relevant objects.

▶ Always carefully observe the traffic conditions and be ready to brake at all times.

▶ Take into account the traffic situation before calling up the stored speed.

WARNING Risk of accident due to insufficient deceleration by Active Distance Assist DISTRONIC

Active Distance Assist DISTRONIC brakes your vehicle with up to 50% of the maximum possible deceleration. If this deceleration is not sufficient, Active Distance Assist DISTRONIC alerts you with a visual and acoustic warning.

▶ In these cases, adjust your speed and keep a sufficient distance.

▶ Brake the vehicle yourself and/or take evasive action.

WARNING Risk of accident if detection function of Active Distance Assist DISTRONIC is impaired

Active Distance Assist DISTRONIC does not react or has a limited reaction:

- when driving on a different lane or when changing lanes
- to pedestrians, animals, bicycles or stationary vehicles, or unexpected obstacles
- to complex traffic conditions
- to oncoming vehicles and crossing traffic

As a result, Active Distance Assist DISTRONIC may neither give warnings nor intervene in such situations.

▶ Always observe the traffic conditions carefully and react accordingly.

Active Distance Assist DISTRONIC may not detect narrow vehicles driving in front, e.g. motorcycles and vehicles driving on a different line.

Operating Active Distance Assist DISTRONIC

Requirements:

- The vehicle has been started.
- The parking brake has been released.
- ESP® is activated and is not intervening.
- The transmission is in position D.
- The driver's and the front-passenger door are closed.
- The seat occupancy recognition on the driver's seat has detected that the driver has fastened the seat belt.
- The check of the radar sensor system has been successfully completed.

Activating Active Distance Assist DISTRONIC

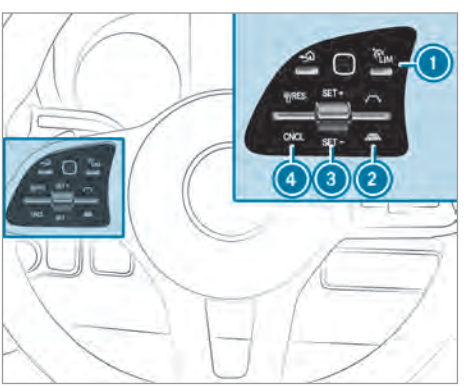

▶ Press button 1.

▶ **To activate without a stored speed:** press rocker switch 3 up (SET+) or down (SET-).
The current speed is then saved and maintained by the vehicle.

or

▶ **To activate with a stored speed:** press rocker switch 4 up (RES).

ⓘ If rocker switch 4 is pressed up twice, Active Distance Assist DISTRONIC is activated with the speed restriction displayed in the instrument cluster.

Accepting the displayed speed limit when Distance Assist DISTRONIC is activated

▶ Press rocker switch 4 up (RES).
The speed limit displayed in the instrument cluster is adopted as the stored speed. The vehicle adapts its speed to that of the vehicle in front, but only up to the stored speed.

Pulling away again with Active Distance Assist DISTRONIC

▶ Remove your foot from the brake pedal.

▶ Press rocker switch 4 up (RES).

or

▶ Depress the accelerator pedal briefly with force.
The functions of Active Distance Assist DISTRONIC continue to be carried out.

Deactivating Active Distance Assist DISTRONIC

⚠ **WARNING** Risk of accident due to Active Distance Assist DISTRONIC still being activated when you leave the driver's seat

If you leave the driver's seat while the vehicle is being braked by Active Distance Assist DISTRONIC only, the vehicle can roll away.

▶ Always deactivate Active Distance Assist DISTRONIC and secure the vehicle to prevent it from rolling away before you leave the driver's seat.

▶ Press rocker switch 4 down (CNCL).

▶ Depress the brake pedal.

Increasing or reducing the speed

▶ Push rocker switch 3 up (SET+) or down (SET-).
The stored speed is increased or reduced by 1 mph (1 km/h).

or

▶ Press and hold rocker switch 3 up (SET+)/down (SET-).
The stored speed is increased or reduced in 1 mph (1 km/h) increments.

or

▶ Push rocker switch 3 beyond the pressure point.
The stored speed is increased or reduced by 5 mph (10 km/h).

or

▶ Push rocker switch ③ beyond the pressure point and hold.
The stored speed is increased or reduced in 5 mph (10 km/h) increments.

Increasing or reducing the specified distance from the vehicle in front

▶ **To increase the specified distance:** press rocker switch ② down ( ).

▶ **To reduce the specified distance:** press rocker switch ② up ( ).

Information on Hill Start Assist

Hill Start Assist holds the vehicle for a short time when pulling away on a hill under the following conditions:

- **Vehicles with automatic transmission:** the transmission is in position D or R.
- The parking brake has been released.

This gives you enough time to move your foot from the brake pedal to the accelerator pedal and depress it before the vehicle begins to roll.

⚠ **WARNING** Risk of accident and injury due to the vehicle rolling away

After a short time, Hill Start Assist no longer holds the vehicle and it can roll away.

▶ Therefore, swiftly move your foot from the brake pedal to the accelerator pedal. Never attempt to leave the vehicle if it is being held by Hill Start Assist.

HOLD function

HOLD function

Requirements:

- The seat occupancy recognition on the driver's seat has detected that the driver has fastened the seat belt.

The HOLD function holds the vehicle at a standstill without requiring you to depress the brake pedal, e.g. when pulling away on steep slopes. When you depress the accelerator pedal to pull away, the braking effect is canceled and the HOLD function is deactivated.

System limitations

- The incline must not be greater than 30%.

Rear view camera with rear-view mirror display

Function of the rear view camera with inside rearview mirror display

The rear view camera is connected to the vehicle's inside rearview mirror. When you engage reverse gear the rear view camera's image appears in the left area of the inside rearview mirror. It is therefore possible to see what is behind the vehicle when backing up.

The rear view camera with inside rearview mirror display is only an aid. It is not a substitute for you paying attention to the surroundings. You are always responsible for safe maneuvering and parking. Make sure that there are no persons, animals or objects etc. in the maneuvering area while maneuvering and parking in parking spaces.

The rear view camera with inside rearview mirror display may show a distorted view of obstacles, show them incorrectly or not at all. It cannot show all objects which are very near to or under the rear bumper. It will not warn you of a collision, people or objects.

The area behind the vehicle is displayed as a mirror image.

System limitations

The rear view camera with inside rearview mirror display will not function, or will only partially function, in the following situations:

- if there is heavy rain, snow or fog
- if the ambient light is poor, e.g. at night
- if the area is illuminated with fluorescent lighting, the inside rearview mirror display may flicker
- if the temperature changes very quickly, for example if you drive out of the cold into a heated garage in the winter
- if the ambient temperature is very high
- if the camera lens is covered, dirty or fogged up. Observe the notes on cleaning the rear view camera (→ page 183).
- the camera or rear of your vehicle is damaged. In this case, have the camera and its position and setting checked at a qualified specialist workshop.

The field of vision and other functions of the rear view camera may be restricted due to additional accessories on the rear of the vehicle (e.g. license plate bracket or bicycle rack).

ⓘ The inside rearview mirror display contrast may be impaired due to incident sunlight or other light sources. In this case, pay particular attention.

ⓘ Have the inside rearview mirror repaired or replaced if its use is considerably restricted, for example through pixel errors.

ⓘ Objects that are not at ground level appear further away than they actually are.

Examples of such objects:

- the bumper of a vehicle parked behind
- the drawbar of a trailer
- the ball neck of a trailer coupling
- the tail-end of a truck
- slanted posts

Displaying and hiding the rear-view mirror display

Displaying

▶ Engage reverse gear.
The rear view camera image appears in the left area of the inside rearview mirror.

ⓘ Be aware of the system limitations of the rear view camera with rear-view mirror display.

Hiding

▶ Engage another gear.

or

▶ Switch off the engine.
The display will be hidden after a short time.

ATTENTION ASSIST

Function of ATTENTION ASSIST

ATTENTION ASSIST can assist you on long, monotonous journeys, e.g. on freeways and expressways. If ATTENTION ASSIST detects indicators of fatigue or increased lapses in concentration on the part of the driver, it suggests taking a break.

ATTENTION ASSIST is only an aid. It cannot always detect drowsiness or increased lapses in concentration in good time. The system is not a substitute for a well-rested and attentive driver. On long journeys, take regular and timely breaks that allow you to rest properly.

You can choose between two settings:

- **Standard:** normal system sensitivity
- **Sensitive:** higher system sensitivity. The driver is warned earlier and the attention level detected by the system (Attention Level) is adapted accordingly.

If fatigue or increased lapses in concentration are detected, the ATTENTION ASSIST: Take a Break! warning appears in the Instrument Display. You can acknowledge the message and take a break if necessary. If you do not take a break and ATTENTION ASSIST continues to detect increased lapses in concentration, you will be warned again after a minimum of 15 minutes.

Instrument Display (color display)

You can have the following status information for ATTENTION ASSIST displayed in the Assistance menu of the on-board computer:

- The journey length since the last break
- The attention level determined by ATTENTION ASSIST:
  - The fuller the circle is, the higher the detected attention level is
  - The circle in the center of the display empties from the outside inwards as attentiveness decreases

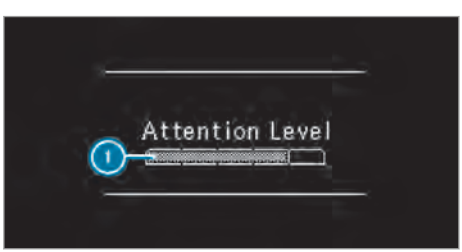

Instrument Display (black and white display)

You can have the following status information for ATTENTION ASSIST displayed in the Assistance menu of the on-board computer:

- The journey length since the last break
- The attention level determined by ATTENTION ASSIST:
  - The fuller the bar is, the higher the detected attention level is
  - The bar empties as attentiveness decreases

If ATTENTION ASSIST cannot calculate the attention level and cannot issue a warning, the Attention Level message appears.

If ATTENTION ASSIST is deactivated, the OFF symbol appears in the assistance graphic in the instrument display when the engine is running. ATTENTION ASSIST is activated automatically when the engine is re-started. The last selected sensitivity level remains stored.

System limitations

ATTENTION ASSIST is active in the 37 mph (60 km/h) to 124 mph (200 km/h) speed range.

The functionality of ATTENTION ASSIST is restricted, and warnings may be delayed or not occur at all, in the following situations:

- The journey lasts less than approximately 30 minutes
- The road condition is poor (uneven road surface or potholes)
- The vehicle is subjected to a strong crosswind
- You have a sporty driving style (high cornering speeds or high rates of acceleration)
- The time is set incorrectly
- You change lanes and vary your speed frequently in active driving situations

The ATTENTION ASSIST drowsiness or alertness assessment is deleted and restarted when continuing the journey in the following situations:

- If you switch off the engine
- If you unfasten your seat belt and open the driver's door (e.g. change drivers or take a break)

Setting ATTENTION ASSIST

On-board computer:

Settings ▸▸ DriveAssist ▸▸ Attention Assist (Attention Assist)

Setting options

The following settings are available:

- Standard
- Sensitive
- Off

▶ Select a setting.

Blind Spot Assist

Function of Blind Spot Assist with exit warning

Blind Spot Assist uses two lateral, rear-facing radar sensors to monitor the area directly next to and on the side behind the vehicle.

ⓘ USA only:
This device has been approved by the FCC as a "Vehicular Radar System". The radar sensor is intended for use in an automotive radar system only. Removal, tampering, or altering of the device will void any warranties, and is not permitted by the FCC. Do not tamper with, alter or use in any non-approved way. Any unauthorized modification to this device could void the user's authority to operate the equipment.

⚠ **WARNING** Risk of accident despite Blind Spot Assist

Blind Spot Assist reacts neither to stationary objects nor to vehicles approaching and overtaking you at a greatly different speed.

As a result, Blind Spot Assist cannot warn drivers in these situations.

▶ Always pay careful attention to the traffic situation and maintain a safe distance at the side of the vehicle.

Blind Spot Assist is only an aid. It may fail to detect some vehicles and is no substitute for attentive driving. Always ensure that there is sufficient distance to the side for other road users and obstacles.

If a vehicle is detected above speeds of approximately 7.5 mph (12 km/h) and this vehicle subsequently enters the monitoring range directly next to your vehicle, the warning lamp in the outside mirror lights up red.

ⓘ When a trailer is connected, the radar sensor's field of vision may be impaired, thereby making limited monitoring possible. Always pay careful attention to the traffic situation and maintain a safe distance at the side of the vehicle.

If a vehicle is detected close to your vehicle in the lateral monitoring range and you switch on the turn signal indicator in the corresponding direction, a warning tone sounds. The red warning lamp in the outside mirror flashes. If the turn signal indicator remains switched on, all other detected vehicles are indicated only by the flashing of the red warning lamp.

If you overtake a vehicle quickly, no warning is given.

Exit warning

The exit warning is an additional function of Blind Spot Assist and warns vehicle occupants when leaving the vehicle about any approaching vehicles.

⚠ **WARNING** Risk of accident despite exit warning

The exit warning reacts neither to stationary objects nor to vehicles approaching you at a greatly different speed.

As a result, the exit warning cannot warn drivers in these situations.

▶ Always pay particular attention to the traffic situation when opening the doors and make sure there is sufficient clearance.

ⓘ An exit warning is not issued for sliding doors and rear-end doors.

Overview

When the vehicle is stationary, an object is detected from behind in the monitoring range.	Display in outside mirror
When the vehicle is stationary, a door on the relevant side of the vehicle is opened. An object which is close to your vehicle is detected in the monitoring range.	Visual and audible warning

ⓘ This additional function is only available when Blind Spot Assist is activated and up to a maximum of three minutes after the ignition has been switched off. The end of the availability of the exit warning function is indicated by a series of flashes in the outside mirror.

The exit warning function is only an aid and is no substitute for the attentiveness of the vehicle occupants. Responsibility always lies with the vehicle occupants when opening doors and leaving the vehicle.

System limitations

Blind Spot Assist and the exit warning function may be limited in the following situations:

- if there is dirt on the sensors or the sensors are obscured
- if there is poor visibility, e.g. due to fog, heavy rain, snow or spray
- if narrow vehicles are within the monitoring range, e.g. bicycles

ⓘ Stationary or slowly moving objects are not displayed.

Warnings may be issued in error when driving close to crash barriers or similar solid lane borders. Warnings may be interrupted when driving alongside long vehicles, for example trucks, for a prolonged time.

Blind Spot Assist is not operational when reverse gear is engaged.

The exit warning function may be limited in the following situations:

- when the sensor is blocked by adjacent vehicles in narrow parking spaces
- when people are approaching

Activating/deactivating Blind Spot Assist

On-board computer:

→ Settings

▶ Activate or deactivate Totwinkel-Assistent (Blind Spot Assist).

Function of Rear Cross Traffic Alert

The radar sensors in the bumper are used for the system. This way the area adjacent to the vehicle is continually monitored. If the radar sensors are obscured by vehicles or other objects, detection is not possible.

ⓘ Also read the notes on Blind Spot Assist (→ page 147).

Vehicles with Blind Spot Assist: drivers can also be warned of any crossing traffic when backing up out of a parking space. If a vehicle is detected, the warning lamp in the outside mirror on the relevant side lights up red. If it detects a critical situation, a warning tone also sounds.

Vehicles with Blind Spot Assist and Parking Assist PARKTRONIC: drivers can also be warned of any crossing traffic when backing up out of a parking space. If a critical situation is detected, a warning symbol appears on the camera image of the multimedia system. If the driver does not respond to the warning, the vehicle's brakes can be applied automatically. In this case, a warning tone sounds.

The Rear Cross Traffic Alert function is active under the following conditions:

- Blind Spot Assist is activated.
- Reverse gear is engaged or the vehicle is backing up at walking pace.
- If the maneuvering assistance function is activated in the multimedia system.

The Rear Cross Traffic Alert function is unavailable when driving with a trailer.

Lane Keeping Assist and Active Lane Keeping Assist

Functions of Lane Keeping Assist

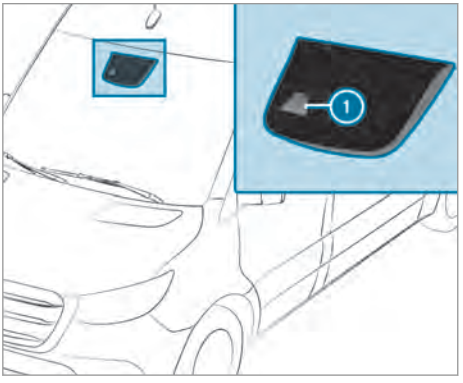

Lane Keeping Assist monitors the area in front of your vehicle with multifunction camera 1. It serves to protect you against unintentionally leaving your lane. You may also be warned by a vibrating message from the steering wheel and by the status symbol flashing in the instrument display.

The warning is issued when the following conditions are met at the same time:

- Lane Keeping Assist detects lane markings.
- A front wheel passes over the lane markings.

You can activate and deactivate the Lane Keeping Assist warning.

If you fail to adapt your driving style, Lane Keeping Assist can neither reduce the risk of accident nor override the laws of physics. It cannot take into account road, weather or traffic conditions. Lane Keeping Assist is only an aid and is not intended to keep the vehicle in the lane without the driver's cooperation. You are responsible for the distance to the vehicle in front, for vehicle speed, braking in good time and for staying in your lane.

System limitations

The system may be impaired or may not function in the following situations:

- There is poor visibility, e.g. due to insufficient illumination of the road, highly variable shade conditions, or due to rain, snow, fog or heavy spray.
- Glare from oncoming traffic, direct sunlight or reflections.
- There is dirt on the windshield in the vicinity of the multifunction camera or the camera is fogged up, damaged or obscured.
- No or several, unclear lane markings are present for one lane, e.g. in a construction area.
- The lane markings are worn, dark or covered.
- The distance to the vehicle in front is too small, and therefore the lane markings cannot be detected.
- The lane markings change quickly, e.g. lanes branch off, cross one another or merge.
- The road is very narrow and winding.

Functions of Active Lane Keeping Assist

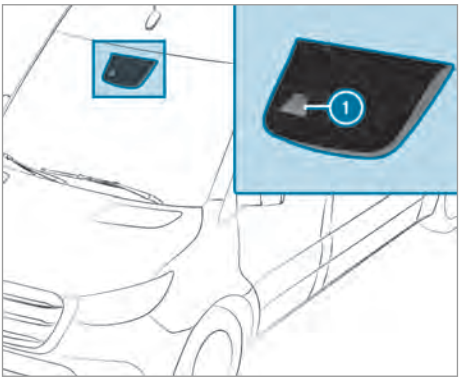

Active Lane Keeping Assist monitors the area in front of your vehicle by means of multifunction camera 1. It serves to protect you against unintentionally leaving your lane. You may also be warned by a vibrating message from the steering wheel and by the status symbol flashing in the instrument display. In addition, you may be guided back into your lane by a lane-correcting brake application. A relevant message appears in the instrument display.

The warning is issued when the following conditions are met at the same time:

- The driving system detects lane markings.
- A front wheel passes over the lane markings.

A lane-correcting brake application occurs when the following conditions are met:

- Active Lane Keeping Assist detects lane markings on both sides of the vehicle.
- A front wheel drives over a solid lane marking.

A relevant message appears in the instrument display.

The brake application is available in the speed range between approximately 40 mph (60 km/h) and 100 mph (160 km/h).

You can either deactivate the Active Lane Keeping Assist warning or switch off the system completely.

If you fail to adapt your driving style, Active Lane Keeping Assist can neither reduce the risk of an accident nor override the laws of physics. It cannot take into account road, weather or traffic conditions. The driving system is an aid for when you unintentionally leave or cross the lane and not a system for automatically keeping to the lane. You are responsible for the distance to the vehicle in front, for vehicle speed, braking in good time and for staying in your lane.

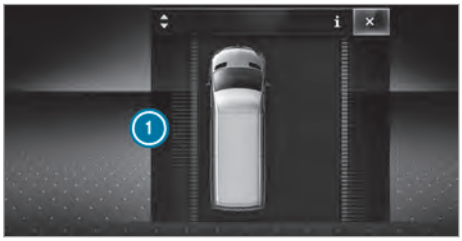

If a lane-correcting brake application from Active Lane Keeping Assist occurs, display 1 appears in the multifunction display.

System limitations

No lane-correcting brake application from Active Lane Keeping Assist occurs in the following situations:

- You clearly and actively steer, brake or accelerate.
- You switch on the turn signal.
- A driving safety system intervenes, such as ESP® or Active Brake Assist.
- You have adopted a sporty driving style with high cornering speeds or high rates of acceleration.
- ESP® has been switched off.
- When driving with a trailer, the electrical connection to the trailer has been correctly established.
- If a loss of tire pressure or a defective tire has been detected and displayed.

The system may be impaired or may not function in the following situations:

- There is poor visibility, e.g. due to insufficient illumination of the road, highly variable shade conditions, or due to rain, snow, fog or heavy spray.
- Glare from oncoming traffic, direct sunlight or reflections.
- There is dirt on the windshield in the vicinity of the multifunction camera or the camera is fogged up, damaged or obscured.
- No or several, unclear lane markings are present for one lane, e.g. in a construction area.
- The lane markings are worn, dark or covered.

- The distance to the vehicle in front is too small, and therefore the lane markings cannot be detected.
- The lane markings change quickly, e.g. lanes branch off, cross one another or merge.
- The road is very narrow and winding.

Activating/deactivating Lane Keeping Assist and Active Lane Keeping Assist

On-board computer:

→ Settings ▸▸ DriveAssist

▶ Depending on vehicle equipment, select Akt. Spurhalte-Assistent (Active Lane Keeping Assist) or Spurhalte-Assistent (Lane Keeping Assist).
The driving system is activated or deactivated, depending on its previous status.

Work mode

ADR (working speed control)

Function of ADR (working speed control)

When activated, ADR automatically increases the engine speed to a preset speed or a speed you have set.

ⓘ After a cold start, the idle speed of the engine is increased automatically. If the preset working speed is lower than the increased idle speed, the working speed is only reached once the engine has completed the warm-up phase.
It is only possible to activate ADR with the vehicle stationary and the parking brake applied.
On vehicles with automatic transmission, the selector lever must be in position P.

Activating/deactivating ADR

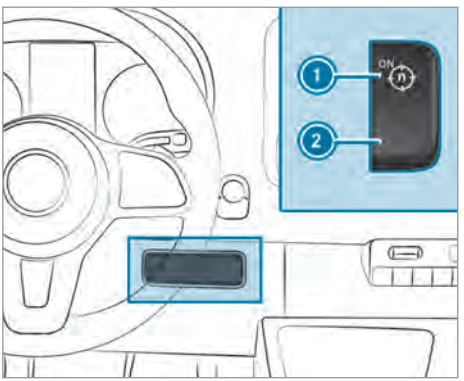

▶ **To activate:** while the engine is running, press switch ①.
The Working Speed Governor Active message appears in the multifunction display.

▶ **To deactivate:** while the engine is running, press switch ②.

ADR goes out automatically in the following situations:

- You release the parking brake.
- You depress the brake pedal.
- The vehicle moves.
- The control unit detects a malfunction.

Adjusting ADR

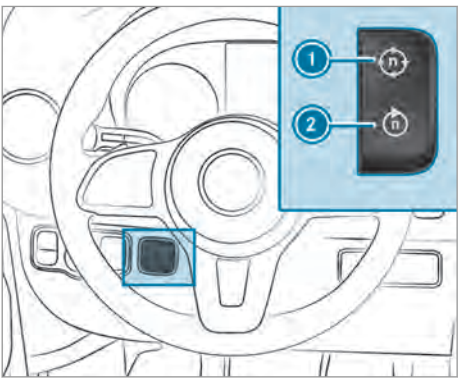

▶ Engage power take-off or activate ADR.

▶ **To increase:** press switch ①.

▶ **To reduce:** press switch ②.

Trailer operation

Notes on towing a trailer

⚠ **WARNING** Risk of accident- and injury if the load is exceeded

If you exceed the permitted load when using the rack, the rack system may disconnect from the vehicle and endanger other road users.

▶ Always comply with the permitted load when using the rack.

WARNING Swerving of the vehicle/trailer combination due to increased speed

If the vehicle/trailer combination swerves, you can lose control of it.

The vehicle/trailer combination can even tip over.

- Under no circumstances should you try to increase the speed to straighten the vehicle/trailer combination.
- Reduce speed and do not counter-steer.
- If necessary, apply the brakes.

WARNING Risk of accident due to the brake system overheating

If you leave your foot on the brake pedal when driving, the brake system may overheat.

This increases the braking distance and the brake system may even fail.

- Never use the brake pedal as a footrest.
- Do not depress the brake pedal and the accelerator pedal at the same time while driving.

WARNING Danger of accident due to unsuitable ball coupling

If you install an unsuitable ball coupling, overloading of the trailer hitch and rear axle will be the result. This is particularly the case if the ball coupling is relatively long or angled differently.

The handling characteristics may be heavily impaired and the trailer can become detached. There is a risk of fatal injury.

- Only install a ball coupling that meets the permitted dimensions and has been designed for the trailer operation requirements.
- Do not modify the ball coupling or the trailer hitch.

WARNING Risk of accident and injury due to an incorrectly installed ball coupling

If the ball coupling is not installed and engaged correctly, it may become detached during travel and endanger other road users. There is a risk of fatal injury.

- Install and secure the ball coupling as described in the ball coupling manufacturer's installation instructions.
- When the ball coupling has been installed, ensure that it is correctly secured before every trip.

WARNING Risk of accident due to an incorrectly installed and secured ball neck

If the ball neck is not correctly installed and secured, the trailer can become detached.

- Install and secure the ball neck as described in the ball neck manufacturer's installation instructions.
- When the ball neck has been installed, ensure that it is correctly secured before every trip

NOTE Wearing out the brake linings by continuously depressing the brake pedal

- Do not depress the brake pedal continuously whilst driving.
- To use the braking effect of the engine, shift to a lower gear in good time.

Always comply with the operating instructions of the manufacturer of the trailer coupling and the ball neck.

Place your vehicle/trailer combination on surfaces that are as even as possible and secure it against rolling away (→ page 132). Couple and uncouple the trailer carefully.

When backing up the towing vehicle, ensure that there is no-one between the vehicle and the trailer.

If you do not connect the trailer to the towing vehicle correctly, the trailer may become detached. Once it has been connected and is roadworthy, the trailer must be in a horizontal position behind the towing vehicle.

Note the following regarding the tongue weight:

- Make full use of the maximum tongue weight, where possible
- Do not exceed or fall below the permitted tongue weight

Do not exceed the following values:

- Permitted braked or unbraked towing capacity

The maximum permissible towing capacity for trailers without a separate braking system is 1,653 lbs (750 kg).

- Permissible rear axle load of the towing vehicle
- Permissible gross mass of the towing vehicle
- Permissible gross mass of the trailer
- Permissible gross towing mass
- Maximum permissible speed of the trailer

The relevant permitted values, which must not be exceeded, can be found in the following places:

- In your vehicle documents
- On the identification plate of the trailer hitch
- On the trailer's identification plate
- On the vehicle identification plate

If there are discrepancies between the values, the lowest one shall apply.

Before driving off, ensure the following:

- The tire pressure on the rear axle of the towing vehicle has been set for the maximum load.
- The headlamps have been set correctly.

Values approved by the manufacturer can be found on the identification plates and in the section for the towing vehicle (→ page 205).

Your vehicle will act differently with a trailer relative to without a trailer:

- The vehicle/trailer combination will be heavier.
- The vehicle/trailer combination will be restricted in its acceleration and climbing ability.
- The vehicle/trailer combination will have an increased braking distance.
- The vehicle/trailer combination will be more susceptible to crosswind gusts.
- The vehicle/trailer combination will require more sensitive steering.
- The vehicle/trailer combination will have a larger turning radius.

This may impair the vehicle's driving characteristics.

When driving with a vehicle/trailer combination, always adapt your speed to the current road and weather conditions. Drive carefully. Keep a sufficient safe distance.

Comply with the maximum speed of 49 mph (80 km/h) or 62 mph (100 km/h), even in countries in which higher speeds are permitted for vehicle/trailer combinations.

Comply with the legally prescribed maximum speed for vehicle/trailer combinations in force in the country, state or Canadian province in question. Before driving, consult the trailer's vehicle documents to see the maximum permissible speed for your trailer.

Attach only an approved trailer hitch to your vehicle. Use only a ball neck that has been approved for your vehicle. Further information about availability and installation of the trailer electrical system is available from any qualified specialist workshop.

The trailer hitch is one of the most important vehicle parts for road safety. Comply with the instructions on operating, maintaining and servicing in the manufacturer's operating instructions.

ⓘ Your vehicle's bumpers are not suitable for installing detachable trailer tow hitches.

Do not attach any rented trailer tow hitches or any other detachable trailer tow hitches to the bumpers.

ⓘ When using a trailer, remember that PARKTRONIC is available only to a limited extent, if at all.

ⓘ The ball head height will change depending on the vehicle's load. In this case, use a trailer with a height-adjustable drawbar.

Driving notes

The maximum permissible speed for vehicle/trailer combinations depends on the type of trailer. Before driving, consult the trailer's vehicle documents to see the maximum permissible speed for your trailer.

Your vehicle will act differently with a trailer relative to without a trailer, and will consume more fuel. In the case of a long and steep descent, you must select shift range **3**, **2** or **1** in good time.

ⓘ This also applies if the cruise control is switched on.

You will thereby make use of the engine's braking effect and will not have to brake as often to control the speed. This will take some of the strain off the brake system and prevent the brakes from overheating and wearing too quickly. If you need additional braking, depress the brake pedal intermittently rather than continuously.

Driving tips

If the trailer sways, remember the following points:

- Do not accelerate under any circumstances.
- Do not countersteer.
- If necessary, apply the brakes.

ⓘ You can prevent the trailer from swaying and rocking by retrofitting stabilizer bars or trailer stability programs. You can obtain further information from an authorized Mercedes-Benz Center.

- Maintain a larger distance than when driving without a trailer.
- Avoid braking abruptly. If possible, brake gently first of all so that the trailer closes up behind your vehicle. Then, increase the braking force rapidly.
- The values given for start-off gradeability refer to sea level. When driving in mountainous areas, note that engine output, and therefore start-off gradeability, will decrease with increasing altitude.

Coupling/uncoupling a trailer

Coupling a trailer

! NOTE Damage to the vehicle battery due to full discharge

Charging the trailer battery using the power supply of the trailer can damage the vehicle battery.

▶ Do not use the vehicle's power supply to charge the trailer battery.

▶ Shift the selector lever to position P.
▶ Apply the vehicle's parking brake.
▶ Close all the doors.
▶ Position the trailer on a level surface behind the vehicle.

ⓘ The ball head height changes depending on the vehicle's load. In this case, use a trailer with a height-adjustable trailer drawbar.

▶ Couple up the trailer.
▶ Establish all electrical and other connections to the trailer.
▶ Remove objects or devices which prevent the trailer from rolling, e.g. wheel chocks.
▶ Release the trailer's parking brake.

ⓘ The vehicle harness has a cable connection to the brake light indicator lamp.

Observe the maximum permissible trailer dimensions (width and length).

Most US states and all Canadian provinces prescribe the following points, and you are urgently recommended to comply with these:

- Safety chains between the towing vehicle and the trailer. The chains should be routed in a criss-cross pattern under the trailer drawbar. They must be connected to the trailer tow hitch and not to the bumper or to the vehicle axle.

  Leave sufficient slack in the chains. This allows for even sharp cornering.
- A separate brake system is required for certain trailers.
- A safety feature is required for braked trailers. Determine the specific requirements according to the relevant laws.

  If the trailer becomes detached from the towing vehicle, the safety feature triggers the trailer brakes and can thus reduce the danger.

Uncoupling a trailer

⚠ WARNING Risk of being crushed and becoming trapped when uncoupling a trailer

When uncoupling a trailer with an engaged inertia-activated brake, your hand may become trapped between the vehicle and the trailer drawbar.

▶ Do not uncouple trailers with an engaged overrun brake.

Do not uncouple a trailer with an overrun brake in a state of overrun. Otherwise, the rebound of the overrun brake can damage your vehicle.

▶ Shift the selector lever to position P.
▶ Apply the vehicle's parking brake.
▶ Close all the doors.
▶ Apply the trailer's parking brake.
▶ Secure the trailer against rolling away with a wheel chock or similar object.
▶ Remove the trailer cables and safety chains.
▶ Uncouple the trailer.

Information about towing a trailer

Operating a trailer is subject to many statutory regulations such as speed restrictions.

Many states also require an auxiliary separate functional braking system when towing a weight that exceeds a certain limit. For your safety, it is recommended to use a separate functional braking system on any towed vehicle.

Make sure that your trailer combination meets local regulations. This not only applies to your place of residence, but also to your destination. Information on this can be obtained from the police and local authorities.

Comply with the following when driving with a trailer:

- Practice cornering, stopping and backing up in a traffic-free location. In this way, you will gain driving experience and become accustomed to the new handling characteristics.
- Before driving, check the following:
  - that the trailer tow hitch and ball coupling are secure
  - that the safety switch for braked trailers is functioning correctly
  - that the safety chains are secure and undamaged
  - that the electrical connections are secure
  - that the lights are functioning correctly
  - the wheels for damage and correct tire pressure (→ page 202)
- Adjust the outside mirrors so that you have a clear view of the rear section of the trailer.
- If the trailer is equipped with an individual braking system, check before each journey whether the brakes are functioning correctly.
- If the trailer has electronically controlled brakes, pull away carefully with the vehicle/trailer combination. Brake manually using the brake controller and check whether the brakes are functioning correctly.
- Secure the load on the trailer in line with the requirements and rules for load-securing methods.
- When driving with a trailer, check at regular intervals that the load is secure and that the lights and brakes are functioning correctly.
- Bear in mind that the handling characteristics are more unstable when towing a trailer than when driving without a trailer. Avoid sudden steering movements.
- The vehicle/trailer combination is heavier, accelerates more slowly, has a reduced climbing ability and an increased braking distance. It is more susceptible to side winds and requires careful steering.
- If possible, do not brake suddenly, but rather moderately at first so that the trailer can activate its brakes. Then increase the pressure on the brake pedal.
- If the automatic transmission shifts between gears on uphill or downhill gradients, restrict the shift range. Select shift range 4, 3, 2 or 1.

  A lower gear and reduced speed decrease the risk of engine damage.
- When driving on a downhill gradient, shift to a lower gear to use the engine's braking effect.

  Avoid constant braking, as this could cause the vehicle brakes and possibly also the trailer brakes to overheat.
- If the coolant temperature increases significantly when the air-conditioning system is switched on, switch the air-conditioning system off.

  Coolant heat can also be dissipated by switching the airflow and the temperature of the heater or air conditioning to the maximum level. Open the windows if necessary.
- When overtaking, pay particular attention to the increased overtaking distance of your vehicle/trailer combination.

  Due to the length of your vehicle/trailer combination you will require a longer stretch of road before switching back to the original lane.

Permissible trailer loads and trailer drawbar noseweights

Weight information

⚠ **WARNING** Risk of accident due to unbraked trailer with excessively high gross weight

If you tow a trailer without a separate functional braking system and a gross trailer weight (GTW) of more than 1635 lbs (750 kg), then the vehicle brake system may overheat.

This increases the braking distance and the brake system may even fail.

▶ Always use a trailer with a separate functional braking system when towing a trailer with a gross trailer weight (GTW) of more than 1635 lbs (750 kg).

! **NOTE** Damage to the drive train, transmission or trailer tow hitch due to excess gross combination weight

The permissible gross combination weight is exceeded.

The drive train, the transmission or the trailer tow hitch may be damaged.

▶ Comply with the permissible gross combination weight.

For vehicles with a permissible gross vehicle weight of 11030 lbs (5003 kg), the permissible gross combination weight is less than the sum of the permissible gross vehicle weight plus the permissible trailer load. If either the vehicle or the trailer is fully laden, the permitted gross vehicle weight or the permitted trailer load values are reduced accordingly. In this case, you may only partially load the trailer or the vehicle.

The gross trailer weight (GTW) is calculated by adding the weight of the trailer to the weight of the load and equipment. If the trailer is equipped with a separate braking system, then the maximum gross trailer weight is 5000 lbs (2268 kg) or 7500 lbs (3402 kg).

The maximum permissible trailer drawbar noseweight on the ball head is 500 lbs (227 kg) or 750 lbs (340 kg). However, the actual trailer drawbar noseweight must not exceed the value given on the trailer tow hitch or trailer identification plates. Where the values differ, the lowest value always applies.

The permissible gross weight for vehicle-trailer combinations (GCWR) is calculated by adding the gross weight of the trailer to the gross vehicle weight including a driver's weight of approximately 150 lbs (68 kg). The maximum permissible gross combination weight is vehicle-specific and equipment-dependent. When driving with a trailer, you should not exceed the maximum permitted permissible gross weight for vehicle-trailer combinations (GCWR).

The permissible values, which must not be exceeded, can be found in your vehicle documents and on the identification plates of the trailer tow hitch, the trailer and the vehicle. The values approved by the manufacturer can also be found in the "Technical data" section. Where the values differ, the lowest value always applies.

Loading the trailer

Use a drawbar noseweight that is as close as possible to the maximum permissible noseweight. Do not undershoot the minimum permissible noseweight. Otherwise, the trailer may become detached.

- Distribute the load over the vehicle and the trailer so as not to exceed either the maximum permissible values for the gross vehicle weight rating (GVWR) and gross trailer weight (GTW), the permissible gross weight for vehicle-trailer combinations (GCWR), nor the maximum permissible gross axle weight rating (GAWR) and trailer drawbar noseweight (TWR) of your vehicle.
- Add the rear axle load to the trailer drawbar noseweight of the trailer drawbar on the ball head (TWR). This will ensure that you do not exceed the permissible gross axle weight rating (GAWR).
- Add the vehicle load to the trailer drawbar noseweight of the trailer drawbar on the ball head (TWR). This will ensure that you do not exceed the permissible gross vehicle weight rating (GVWR).

Checking the vehicle and trailer weight

- Make sure that the weights of the towing vehicle and the trailer comply with the maximum permissible values. Have the car/trailer combination weighed on a calibrated weighing machine. The car/trailer combination comprises the towing vehicle including driver, passengers and load as well as the laden trailer.
- Check the maximum permissible gross axle weight rating of the front and rear axles (GAWR), the gross trailer weight (GTW), the permissible gross weight for vehicle-trailer combinations (GCWR) and the trailer drawbar noseweight rating (TWR).

Trailer power supply

Incorrect cabling of the connector plug may interfere with other electronic systems in the vehicle. Mercedes-Benz therefore recommends that you have the cabling of the connector plug carried out at a qualified specialist workshop.

You can connect accessories up to a maximum of 240 W to the permanent power supply. Do not charge a trailer battery using the power supply.

Your vehicle may be equipped with a range of electrical equipment for trailer operation. Depending on your trailer, you may need an adapter for the electrical connection between the trailer and your vehicle.

The trailer socket of your vehicle is equipped with a permanent power supply at the factory.

The permanent power supply is supplied via trailer socket pin 4.

Note that the trailer's permanent power supply is not switched off when the vehicle's on-board electrical system voltage is low. This could completely discharge your vehicle's starter battery.

Further information on the electrical equipment currently installed on your vehicle, and on installing trailer electrics, can be obtained at any qualified specialist workshop.

Overview of Instrument Display

WARNING Risk of accident due to an instrument display malfunction

If the Instrument Display has failed or malfunctioned, you may not recognize function restrictions applying to safety relevant systems.

The operating safety of your vehicle may be impaired.

- Drive on carefully.
- Have the vehicle checked immediately at a qualified specialist workshop.

If your vehicle's operational safety is impaired, park the vehicle in a safe location immediately. Inform a qualified specialist workshop.

Instrument Display

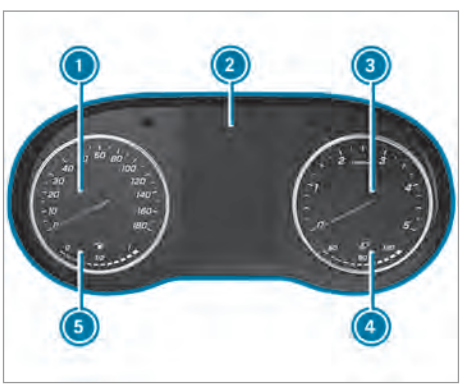

Example: Instrument Display with color display

1. Speedometer
2. Multifunction display
3. Tachometer
4. Coolant temperature display
5. Fuel level and tank cap position display

In normal driving mode, coolant temperature display 4 is permitted to rise to the red marking.

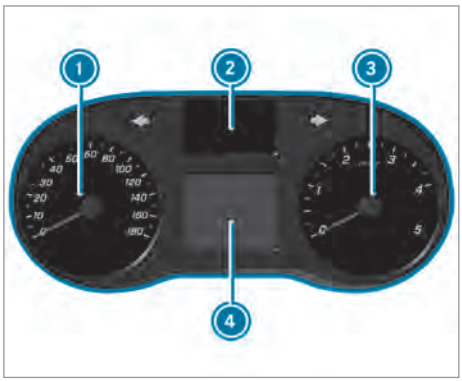

Example: Instrument Display with black and white display

1. Speedometer
2. Indicator lamps display
3. Tachometer
4. Multifunction display

NOTE Engine damage due to excessively high engine speeds

The engine will be damaged if you drive with the engine in the overrevving range.

- Do not drive with the engine in the overrevving range.

When the red marking in tachometer 3 is reached (overspeed range), the fuel supply will be interrupted in order to protect the engine.

WARNING Danger of burns when opening the hood

If you open the hood when the engine has overheated or during a fire in the engine compartment, you could come into contact with hot gases or other escaping operating fluids.

- Before opening the hood, allow the engine to cool down.
- In the event of a fire in the engine compartment, keep the hood closed and call the fire service.

Overview of the buttons on the steering wheel

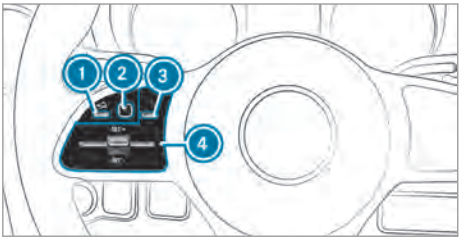

1. ⮌ Back button, left (on-board computer)
2. Touch Control, left (on-board computer)
3. Main menu button (on-board computer)
4. Button group for cruise control or Active Distance Assist DISTRONIC

Operating the on-board computer

WARNING Risk of distraction from information systems and communications equipment

If you operate information and communication equipment integrated in the vehicle when driving, you will be distracted from the traffic situation. This could also cause you to lose control of the vehicle.

- ▶ Only operate this equipment when the traffic situation permits.
- ▶ If you cannot be sure of this, stop the vehicle whilst paying attention to road and traffic conditions and operate the equipment with the vehicle stationary.

You must observe the legal requirements for the country in which you are currently driving when operating the on-board computer.

Operating the on-board computer (vehicles with steering wheel buttons)

ⓘ The display of the on-board computer appears on the multifunction display (→ page 160).

When the function is switched on, different signal tones give feedback while the on-board computer is being operated. These include a signal tone when the end of a list is reached or when a list is being scrolled through.

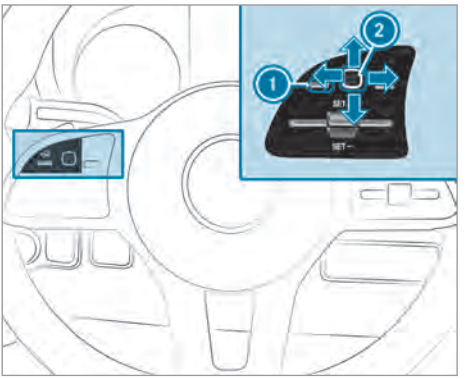

The on-board computer is operated via left-hand Touch Control 2 and the back button on the left 1.

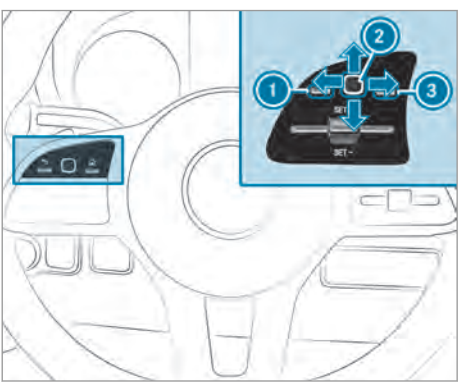

The on-board computer is operated using the following buttons:

- the back button on the left 1
- the left-hand Touch Control 2
- the main menu button on the left 3

The following menus are available:

- Service
- Assistance
- Trip
- Settings

▶ **To call up the main menu:** press the back button on the left 1 repeatedly, or press and hold it.

ⓘ **Vehicles without Active Distance Assist DISTRONIC:** you can call up the main menu of the on-board computer with the [⌂] button.

▶ **To browse through the menu bar:** swipe to the left or right on left-hand Touch Control ②.

▶ **To call up a menu or confirm a selection:** press left-hand Touch Control ②.

▶ **To browse through displays or lists in the menu:** swipe upwards or downwards on left-hand Touch Control ②.

▶ **To call up a submenu or confirm a selection:** press left-hand Touch Control ②.

▶ **To exit a submenu:** press the back button on the left ①.

If you are in a submenu and press and hold the back button on the left ①, the main menu appears.

Overview of the displays on the multifunction display

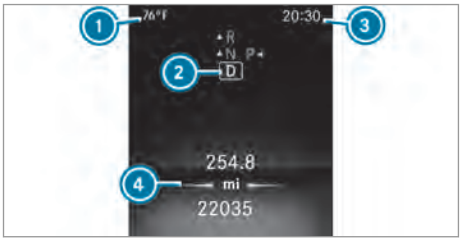

Instrument Display with color display

① Outside temperature
② Transmission position
③ Clock
④ Display section

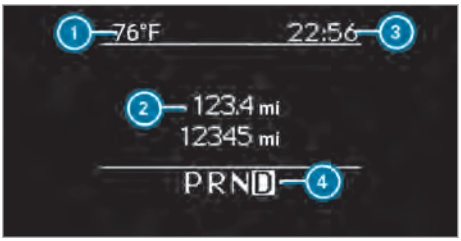

Instrument Display with black and white display

① Outside temperature
② Display section
③ Clock
④ Transmission position

Further displays on the multifunction display:

↑	Gearshift recommendation
P OFF	Parking Assist PARKTRONIC switched off
	Cruise control (→ page 141)
	Active Distance Assist DISTRONIC (→ page 142)
DSR	DSR (→ page 120)
HOLD	HOLD function (→ page 145)
	Adaptive Highbeam Assist(→ page 81)
OFF	ATTENTION ASSIST deactivated
	A door is not fully closed.
	Rear window wiper switched on (→ page 89)
LOW RANGE	LOW RANGE active (→ page 119)
SOS NOT READY	Emergency call system not active
OFF	Active Lane Keeping Assist switched off (→ page 150)
OFF	Active Brake Assist deactivated (→ page 139)
OFF	Blind Spot Assist switched off (→ page 147)

Setting the instrument lighting

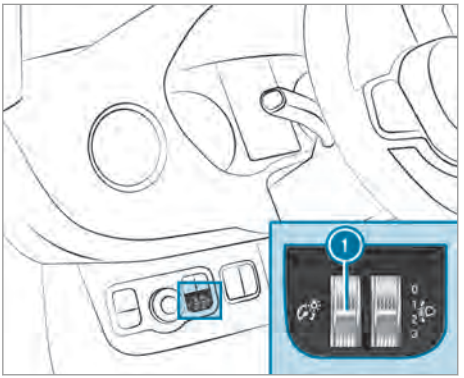

▶ Turn brightness control knob ① upwards or downwards.
The lighting on the Instrument Display and the control elements in the vehicle interior is set.

ⓘ In vehicles without brightness control knob ①, the instrument lighting can be set via the on-board computer (→ page 163).

Menus and submenus

Calling up functions on the service menu

On-board computer:

→ Service

▶ Select and confirm the required function.

The following functions are available on the Service menu:

- Messages: message memory (→ page 247)
- DEF: Displays the DEF range and level (→ page 128)
- Tires:
  - Checks the tire pressure with the tire pressure monitoring system (→ page 209)
  - Restarts the tire pressure monitoring system (→ page 210)
- ASSYST PLUS: calls up the service due date (→ page 173)
- Engine Oil Level: measures engine oil level
- Long-term consumption

Calling up the assistant display

On-board computer:

→ Assistance

▶ Select the desired display and confirm.

The following displays are available on the assistant display:

- Assistant display
- Attention level (→ page 146)

▶ Switch between the displays and confirm the selected display.

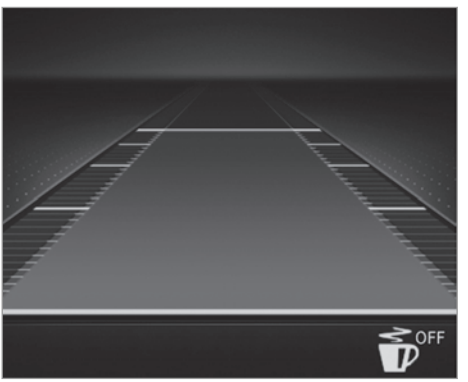

Instrument Display with color display

The following status displays are available on the assistant display:

- OFF: ATTENTION ASSIST switched off
- Displays of the Active Distance Assist DISTRONIC (→ page 142)

Instrument Display with black and white display

The following status displays are available on the assistant display:

- Lane markings dotted: Lane Keeping Assist switched off

- Lane markings solid and thin: Lane Keeping Assist switched on, not ready to issue warnings
- Lane markings solid and thick: Lane Keeping Assist ready to issue warnings

Calling up displays on the trip menu

On-board computer:

→ Trip

▶ Select the desired display and confirm.

The following displays are available on the trip menu:

- Standard display
- Range and current fuel consumption

  With certain engines a recuperation display is also shown. If only a small amount of fuel is left in the fuel tank, a vehicle being refueled appears instead of the approximate range.
- ECO display (→ page 113)
- Trip computer:
  - From Start
  - From Reset
- Digital speedometer

Instrument Display with color display
Standard display (example)

1. Trip distance
2. Total distance

Instrument Display with black and white display
Standard display (example)

1. Trip distance
2. Total distance

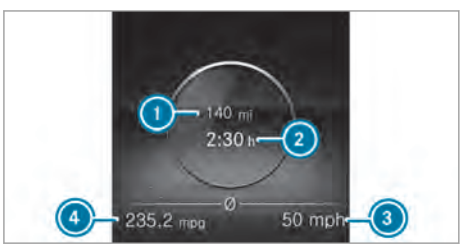

Instrument Display with color display
Trip computer (example)

1. Distance covered (from start/ from reset)
2. Driving time (from start/from reset)
3. Average speed (from start/from reset)
4. Average fuel consumption (from start/from reset)

Instrument Display with black and white display
Trip computer (example)

1. Distance covered (from start/from reset)
2. Driving time (from start/from reset)
3. Average speed (from start/from reset)
4. Average fuel consumption (from start/from reset)

Resetting values on the on-board computer trip menu

On-board computer:

→ Trip

ⓘ The spelling of the displayed main menu may differ. Therefore, pay attention to the menu overview for the instrument display (→ page 159).

You can reset the values of the following functions:

- Trip Odometer:
  - Reset Trip Odometer?
- Trip computer:
  - From Start
  - From Reset
- ECO display

▶ Select the function that is to be reset and confirm this selection.

▶ Confirm the Reset Values? prompt with Yes.

Calling up settings on the on-board computer

On-board computer:

→ Settings

The following entries can be set on the Settings menu:

- DriveAssist
  - Switching ESP (ESP) on and off
  - Switching Akt. Spurhalte-Assistent (Active Lane Keeping Assist) on and off
  - Switching Spurhalte-Assistent (Lane Keeping Assist) on and off
  - Switching Aktiver Brems-Assistent (Active Brake Assist) on and off
  - Switching Totwinkel-Assistent (Blind Spot Assist) on and off
  - Switching Attention Assist (Attention Assist) on and off
- Light
  - Switching Tagfahrlicht (Daytime running lights) on and off
  - Switching Leuchtzeit innen (Illumination period inside) on and off
  - Switching Leuchtzeit außen (Illumination period outside) on and off
  - Switching Auffindbeleuchtung (Locator lighting) on and off
  - Setting Instrument lighting
- Vehicle
  - Setting Winterreifen-Limit (Winter tires limit)
  - Switching Akust. Schließen (Acoustic locking) on and off
  - Switching Autom. Verriegelung (Autom. locking) on and off
  - Switching Ruhezustand (Standby) on and off
  - Switching Regensensor (Rain sensor) on and off
- Setting Heating
- Display and Operation
  - Selecting Sprache (Language)
  - Setting Uhrzeit
  - Setting Datum
  - Setting Einheiten
  - Switching permanent Display DEV Level on and off
  - Operation: Switch Akust. Bedienrückmeld. (Acoustic operational feedback) on and off and set Touch-Control-Empfindl. (Touch-Control sensitivity)
- Factory Settings: Restoring settings

▶ Select an entry and confirm the selection.

▶ Make the necessary changes.

Information about Mercedes PRO

When you log in with a user account to the Mercedes PRO portal, then services and offers from Mercedes-Benz Vans will be available to you.

Availability is country-dependent. You can check the availability of Mercedes PRO in your country at the following page: http://www.mercedes.pro

For more information on Mercedes PRO contact an authorized Mercedes-Benz Center or visit the Mercedes PRO portal.

Information about Mercedes PRO connect

Mercedes PRO connect provides the following services:

- Accident and breakdown management (breakdown assistance call button or automatic accident or breakdown detection)

  Use the breakdown assistance call button in the overhead control panel to make a call to the Mercedes-Benz Customer Center (→ page 164).
- Emergency Call System

  Use the SOS button (SOS button) in the overhead control panel to make a call to the Mercedes-Benz emergency call center (→ page 164).

Mercedes PRO connect accident and breakdown management and the Mercedes-Benz emergency call center are available for you around the clock for the use of the services.

Please note that Mercedes PRO connect is a Mercedes-Benz service. In emergencies, always call the national emergency services first using the standard national emergency service phone numbers. In emergencies, you can also use the Emergency Call System (→ page 187).

The following conditions must be met to use Mercedes PRO connect services in the vehicle:

- You have access to a GSM network
- The contract partner's GSM network coverage is available in the respective region
- The ignition is switched on, so that vehicle data can be transferred automatically

Making a call via the overhead control panel

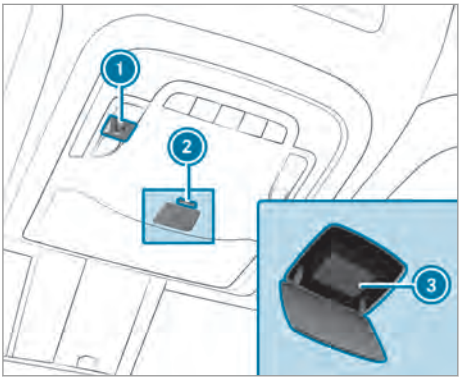

1. Breakdown assistance call button
2. Release catch for the cover on the SOS button (SOS button)
3. SOS button (SOS button)

▶ **To make a breakdown assistance call:** press button 1.

▶ **To make an emergency call:** press the release catch for the cover on SOS button 2 briefly to open.

▶ Press and hold SOS button 3 for at least one second.

An emergency call can still be triggered when a breakdown assistance call is active. This has priority over all other active calls.

Information on the Roadside Assistance call via the overhead control panel

A call to the Mercedes-Benz Customer Center using the Roadside Assistance button has been initiated via the overhead control panel:

In the event of a breakdown, you will get support:

- A qualified Mercedes-Benz technician carries out repairs on site and/or the vehicle will be towed to the nearest authorized Mercedes-Benz Center.

  You may be charged for these services.

You can find information on the following topics:

- activation of Mercedes PRO connect
- operating the vehicle
- nearest authorized Mercedes-Benz Center

- other products and services from Mercedes-Benz

Data is transmitted during the connection to the Mercedes-Benz Customer Center (→ page 165).

Information on Mercedes PRO connect accident management

The Mercedes PRO connect accident management is an extension of the Emergency Call System (→ page 187).

An emergency call is made to the Mercedes-Benz emergency call center after an accident:

- a voice connection is made to a contact person at the Mercedes-Benz emergency call center.
- if necessary, the contact person at the Mercedes-Benz emergency call center forwards the call to Mercedes PRO connect accident management.
- if necessary, the vehicle will be towed to an authorized Mercedes-Benz Center.

Transmitted data during a breakdown assistance call

In certain countries you must confirm the data transfer.

When you make a breakdown assistance call via Mercedes PRO connect, data will be transferred.

The following data is transferred if a breakdown assistance call is made via Mercedes PRO connect:

- vehicle identification number
- reason for the initiation of the call

Notes on loading guidelines

DANGER Risk of poisoning from exhaust gases

Combustion engines emit poisonous exhaust gases, such as carbon monoxide. Exhaust gases can enter the vehicle interior if the rear-end door is open when the engine is running, especially if the vehicle is in motion.

- ▶ Always switch off the engine before opening the rear-end door.
- ▶ Never drive with the rear-end door open.

WARNING Risk of injury from unsecured objects in the vehicle

When objects are unsecured or inadequately secured, they can slip, tip over or be thrown about, striking vehicle occupants.

This also applies to:

- Luggage or loads
- Seats which have been removed and are being transported in the vehicle in an exceptional case

There is a risk of injury, particularly in the event of braking maneuvers or abrupt changes in direction.

- ▶ Always stow objects in such a way that they cannot be tossed about.
- ▶ Before traveling, secure objects, luggage or load to prevent them slipping or tipping over.
- ▶ When a seat is removed, keep it preferably outside the vehicle.

WARNING Risk of injury due to objects being stowed incorrectly

If you do not adequately stow objects in the vehicle interior, they could slip or be tossed around and thereby strike vehicle occupants. In addition, cup holders, open stowage spaces and mobile phone brackets cannot always restrain the objects they contain in the event of an accident.

There is a risk of injury, particularly in the event of sudden braking or a sudden change in direction.

- ▶ Always stow objects in such a way that they cannot be tossed about in these or similar situations.
- ▶ Always make sure that objects do not project from stowage spaces, parcel nets or stowage nets.
- ▶ Close the lockable stowage spaces before starting a journey.
- ▶ Stow and secure objects that are heavy, hard, pointed, sharp-edged, fragile or too large in the cargo compartment.

WARNING Risk of burning from the tailpipe or tailpipe trim

The tailpipe and tailpipe trim can become very hot. If you come into contact with these car parts, you could burn yourself.

- ▶ Always be particularly careful when in the vicinity of the tailpipe and tailpipe trims and supervise children very closely when in this area.
- ▶ Before any contact, allow the car parts to cool down.

If you are using a roof rack, please note the maximum roof load and the maximum load capacity of the roof rack.

You will find information about the maximum roof load in the "Technical data" chapter and information about roof racks in the "Carrier systems" section .

Camera-based driving systems and the sensor functions of the inside rearview mirror may be impaired if you are transporting a load on the roof and it protrudes more than 16 in (40 cm) over the edge of the roof. Therefore, make sure that the load does not overhang by more than 16 in (40 cm).

The handling characteristics of your vehicle are dependent on the load distribution. Therefore, please observe the following notes when loading:

- when transporting a load, never exceed the permissible gross mass or the gross axle weight rating for the vehicle (including occupants). The values are specified on the vehicle identification plate on the B-pillar.
- the load must not protrude above the upper edge of the seat backrests.
- if possible, always transport the load in the cargo compartment.

- fasten the load to the tie-down eyes and spread the load as evenly as possible.
- use tie-down eyes and fastening components which are suitable for the weight and size of the load.

Load distribution

NOTE Risk of damage to the floor covering

Excessive point loading on the cargo compartment floor or on the load area can negatively affect the driving characteristics and could damage the floor covering.

▶ **Vehicles with rear-wheel drive:** distribute the load uniformly. When doing so, ensure that the overall center of gravity of the load is always as low and close to the center as possible and between the axles near the rear axle.

▶ **Vehicles with all-wheel drive:** distribute the load uniformly. When doing so, ensure that the overall center of gravity of the load is always as low and close to the center as possible and between the axles.

Excessive point loading on the cargo compartment floor or on the load area can negatively affect the driving characteristics and could damage the floor covering.

On Cargo Van and Passenger Van:

- always transport the load in the cargo compartment.
- always fasten the load to the rear bench seat backrests.
- move large and heavy loads as far towards the front of the vehicle as possible against the rear bench seat. Stow loads flush with the rear bench seat.
- always additionally secure the load with suitable load securing aids or tie downs.
- the load must not protrude above the upper edge of the seat backrests.
- transport loads behind seats that are not occupied.
- if the rear bench seat is not occupied, insert the seat belts crosswise into the buckle of the opposite seat belt.

Securing loads

Notes on load securing

WARNING Risk of accident and injury due to incorrect use of the lashing straps

If you attach the lashing strap incorrectly when securing loads, the following may occur in the event of abrupt changes in direction, braking maneuver or an accident:

- The tie-down eyes may become detached or the lashing strap may tear if the permissible load is exceeded.
- The load cannot be restrained.

This may cause the load to slip, tip over or be flung about, striking vehicle occupants.

▶ Always tension the lashing straps in the proper manner and only between the described tie-down eyes.

▶ Always use lashing straps designed specifically for the loads.

ⓘ Observe the information relating to the maximum loading capacity of the individual cargo tie-down point. If you combine various cargo tie-down points to secure a load, always take the maximum loading capacity of the weakest cargo tie-down point into account. During maximum full-stop braking, forces may act which can multiply the weight of the load. Always use several cargo tie-down points to distribute and spread the load. Spread the load evenly between the cargo tie-down points or tie-down eyes.

Always observe the operating instructions or the lashing strap manufacturer's instructions for the operation of the lashing strap.

Observe the information relating to the maximum loading capacity of the cargo tie-down points (→ page 245).

As the driver, you are responsible for ensuring the following:

- The load is secured against slipping, tipping, rolling or falling off.

  Take usual traffic conditions as well as swerving or full brake application and bad roads into account.
- The applicable requirements and guidelines relating to load-securing practices are met.

  If this is not the case, this may constitute a punishable offense, depending on local legis-

lation and any ensuing consequences. Observe country-specific laws.

Make sure that the load is secure before every journey and at regular intervals during a long journey. Adjust the load securing as necessary. Information on how to secure loads correctly can be obtained from the manufacturers of load securing aids or tie downs for load-securing, for example.

When securing loads, observe the following:

- Fill spaces between the load and the cargo compartment walls or wheel wells. For this purpose, use rigid load securing aids, such as wedges, wooden fixings or padding.
- Attach secured and stabilized loads in all directions.

  Use the cargo tie-down points or tie-down eyes and the loading rails in the cargo compartment or on the load surface.

  Only use tie downs, such as lashing rods, lock rods or lashing nets and lashing straps, which has been tested in accordance with current standards (e.g. DIN EN). Always use the cargo tie-down point closest to the load; pad sharp edges.

  Loads, and heavy loads in particular, should preferably be secured using the tie-down eyes.

ⓘ You will obtain tie downs tested in accordance with current standards (e.g. DIN EN) from any specialist company or from a qualified specialist workshop.

Notes on the partition

Without a partition, vehicles that are approved as commercial vehicles (N1, N2) do not fulfill ISO 27956, which describes the equipment for properly securing a load in delivery vehicles. If the vehicle is used to transport goods, retrofitting the partition is strongly recommended, as properly securing the load in vehicles without a partition will always be a complex operation.

Overview of cargo tie-down point

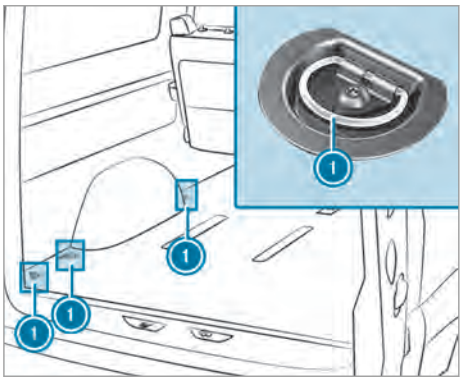

Cargo tie-down points (example: Passenger Van)

1 Tie-down eyes

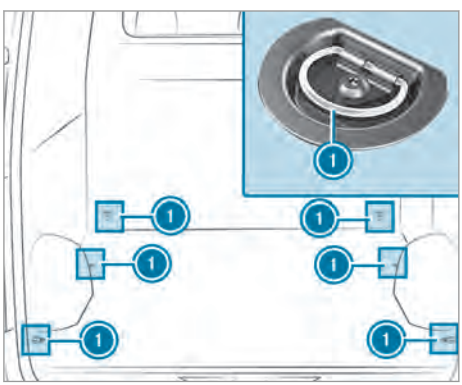

Cargo tie-down points (example: Cargo Van without loading rails)

1 Tie-down eyes

Secure loose loads with an approved lashing net or a tarp.

Always fasten the lashing net or tarp to all available cargo tie-down points. Make sure that the fastening hooks are secured against accidental opening.

If your vehicle is equipped with loading rails in the cargo compartment floor, you can place lashing rods directly in front of and behind the load. The lashing rods directly absorb the potential shifting forces.

Securing loads on the cargo compartment floor by lashing them down is only recommended for

lightweight loads. Lay anti-slip mats underneath the load to secure the load additionally.

Installing and removing tie-down eyes

▶ **To install:** slide the tie-down eye through a recess in the loading rail close to the load until locking mechanism engages in the recess.

ⓘ When you pull locking mechanism up and out of the recess, the tie-down eye is able to move within the loading rail. Make sure that locking mechanism is always engaged in a recess.

▶ Check the tie-down eye for firm seating.

▶ **To remove:** pull locking mechanism up and pull the tie-down eye towards the locking mechanism and out of the loading rail through a recess.

Carrier systems

Information about the roof rack

⚠ **WARNING** Risk of injury due to the maximum roof load being exceeded

When you place a load on the roof as well as all outer and inner attachments, the vehicle's center of gravity will rise and the familiar driving characteristics as well as the steering and braking characteristics will change. When driving around bends, the vehicle will tilt more heavily and may react more sluggishly to steering movements.

If you exceed the maximum roof load, the driving characteristics, as well as the steering and braking, will be greatly impaired.

▶ Never exceed the maximum roof load and adjust your driving style.

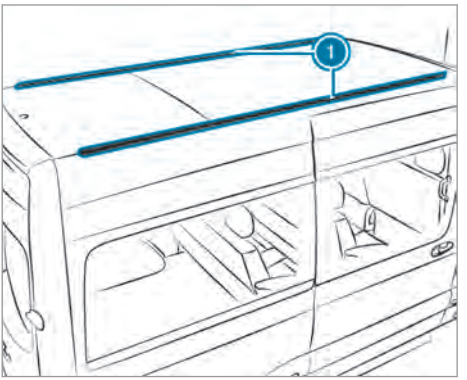

① Mounting rails

Information about the maximum roof load can be found in the "Technical data" section (→ page 246).

Observe the following points for assembling roof racks:

- Tighten the roof rack's screws to a torque of 6.0 lb-ft (8 Nm) – 7.4 lb-ft (10 Nm) in the designated grooved plates.
- The tightened screws should not touch the rails.
- Ensure that the grooved plates are not located in the areas around the plastic caps.
- The grooved plates must have the right cross-section.
- The insides of the mounting rails must be free of dirt.
- Re-tighten the screws uniformly after around 300 miles (500 km).

Mercedes-Benz recommends that you use only roof racks that have been tested and approved for Mercedes-Benz. These help to prevent vehicle damage.

If you want to retrofit the mounting rails, have them installed at a qualified specialist workshop. Otherwise, you could damage the vehicle.

If your vehicle is installed with mounting rails on the roof, you can install a roof rack on the roof. Special fasteners (sliding blocks) are available as accessories for this purpose.

These fasteners are available from any authorized Mercedes-Benz Center.

Using the interior roof carrier system

WARNING Risk of injury due to unsecured loads

When you secure or loosen a load, the load may fall down and injure vehicle occupants.

▶ When securing or loosening a load, do not stand under the load.

NOTE Risk of damage to the belt straps and slider

Excessive point loading on the belt straps and sliders may cause the belt straps to tear or cause the sliders to break off from the rack rail.

▶ Distribute the load evenly. When doing so, ensure that the overall center of gravity of the load is always as close to the center as possible and between the roof rails and between the rack rails.

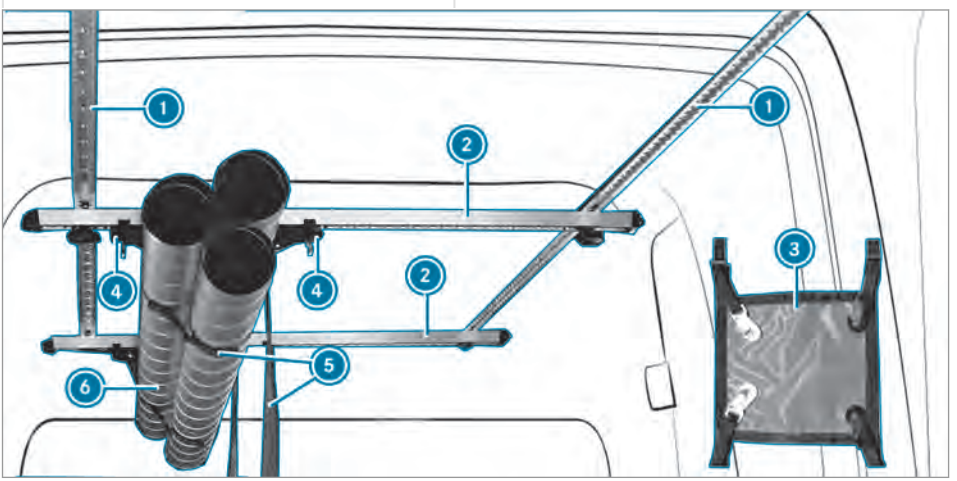

You can use the interior roof rack system to secure loads. It is also suitable for securing long loads.

ⓘ The interior roof rack system may be subjected to a maximum load of 110 lbs (50 kg).

The interior roof rack system consists of the following components:

- Roof rails ① are attached to the roof of the vehicle.
- Rack rails ② are screwed onto the roof rails and can be moved.
- Rack rail ② is equipped with slider pair ④. Slider pair ④ with attached belt strap ⑤ can be moved. Load ⑥ is stowed by placing and lashing it in belt strap ⑤.
- The load has to be secured in the direction of travel and in the opposite direction to the direction of travel using two head lashings ③.

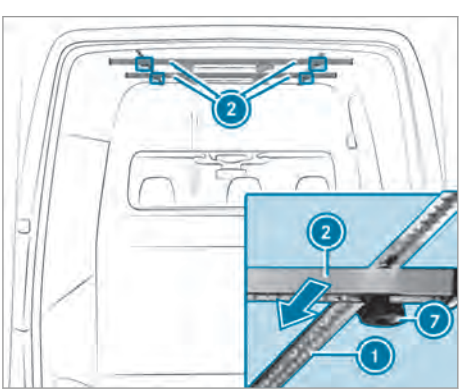

- **To move the rack rails:** unscrew star knobs ⑦ counter-clockwise until they are slightly loose.
- Slide rack rail ② along roof rail ① to the desired position.
- Screw star knobs ⑦ tight clockwise.
- Check that the rack rail is seated securely.

Moving the sliders

WARNING Risk of injury due to inadequately secured loads

If the slider of the interior roof rack system is not engaged properly, the load may come loose, fall down and injure people, for instance when they enter or load and unload the cargo compartment.

- Always engage the slider properly.

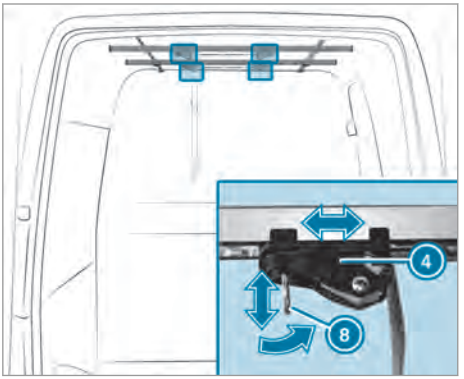

ⓘ Ring ⑧ of slider ④ must always be at an angle of 90° to rack rail ②, so that slider ④ is engaged properly.

- **When the ring of the slider is at an angle of 90° to the rack rail:** pull ring ⑧ of slider ④ down and simultaneously move slider ④ to the desired position.
- Release ring ⑧ at the desired position.
- Move slider ④ slightly further along on rack rail ② until slider ④ engages automatically.
- **When the ring of the slider is parallel to the rack rail:** move slider ④ to the desired position.
- Position ring ⑧ of slider ④ at an angle of 90° to rack rail ②.
  Slider ④ is engaged.

Adjusting the belt strap

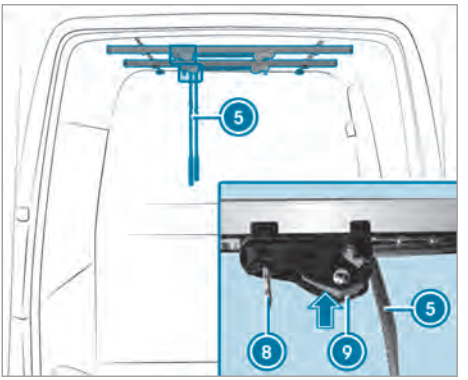

- Press and hold the locking mechanism on slider ⑨.
- Pull or release belt strap ⑤.
- Release the locking mechanism on slider ⑨.

ⓘ When securing or loosening a load, be sure to not stand under the load.

Securing and loosening the load

- **To secure the load:** place the load in the belt straps of the rack rails.
- Fasten the load flush with the partition.
- Secure belt strap ⑤.
- Check that the load is seated securely.
- **To loosen the load:** press and hold the locking mechanism on slider ⑨.
- Pull ring ⑧ of the slider down and simultaneously move the slider away from the load.
- Loosen belt strap ⑤ and at the same time make sure that the load does not fall out of the belt straps.
- Remove the load from the belt straps.

Installing cargo tie down rings

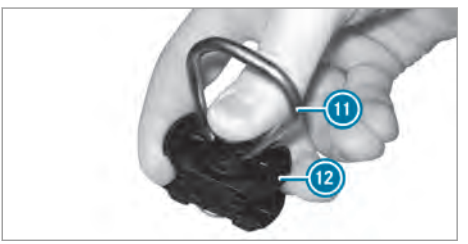

- Turn the ring of cargo tie-down ring ⑪ until it is parallel to the longitudinal axis of cargo tie-down ring ⑫.
- Hold cargo tie-down ring ⑫ between the index finger and middle finger and place your thumb through the ring of cargo tie-down ring ⑪ and onto the central pressure point.
- Use your thumb to push the locking pin down as far as it will go.
- Push cargo tie-down ring ⑫ near the load through the notches on rack rail ② and move it approximately 0.5 in (12 mm).
- Remove your thumb from the pressure point and slide cargo tie-down ring ⑫ until it engages.
- Turn the ring of cargo tie-down ring ⑪ until it is perpendicular to the longitudinal axis of cargo tie-down ring ⑫.
  Cargo tie-down ring ⑫ is secured.

Removing cargo tie down rings

- Turn the ring of cargo tie-down ring ⑪ until it is parallel to the longitudinal axis of cargo tie-down ring ⑫.
- Grip cargo tie-down ring ⑫ as described above under installing and use your thumb to push the locking pin down as far as it will go.
- Slide cargo tie-down ring ⑫ and pull it down and out through the notches of rack rail ②.

Attaching the head lashing

⚠ **WARNING** Risk of injury due to incorrectly secured loads

When the hooks on the head lashing are attached to the rings of the sliders, the sliders could come loose. The load may come loose, fall down and injure people, for instance when they enter or load and unload the cargo compartment.

- Only attach the hooks on the head lashing to the rings of the cargo tie-down rings.

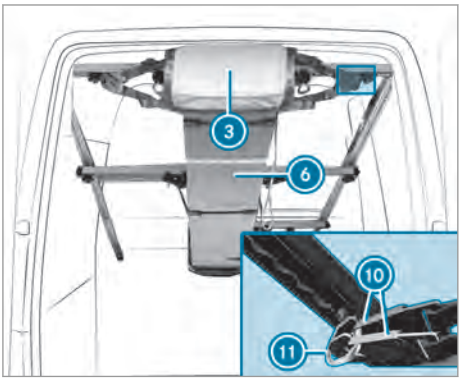

ⓘ The hooks on head lashing ③ may only be attached to the rings of cargo tie down rings ⑪.

- Check that the load is seated securely.
- **To attach the head lashing:** tension head lashing ③ at both ends of load ⑥ and attach two hooks ⑩ of the head lashing to the rings of cargo tie down rings ⑪.

Placing a load on the wheel arch

Comply with the important safety notes under "Notes on loading" (→ page 72).

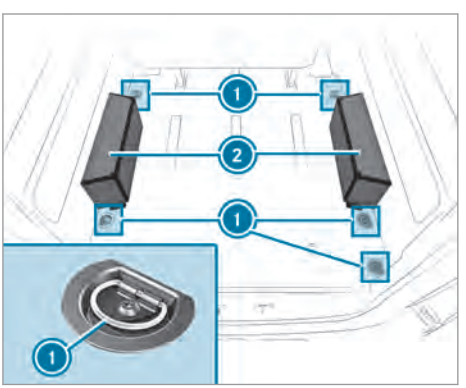

- Place the objects on wheel arch ② and lash them using tie-down eyes ① (→ page 168).

ⓘ A wheel arch may be subjected to a load of 330 lb (150 kg).

ASSYST PLUS service interval display

Function of the ASSYST PLUS service interval display

The ASSYST PLUS service interval display on the instrument display provides information on the remaining time or distance before the next service due date.

You can hide this service message by using the back button on the left-hand side of the steering wheel.

You can obtain further information concerning the servicing of your vehicle from a qualified specialist workshop, e.g. an authorized Mercedes-Benz Center.

Displaying the service due date

On-board computer:

→ Service ▸▸ ASSYST PLUS

The next service due date is displayed.

▶ **To exit the display:** press the back button on the left-hand side of the steering wheel.

Bear in mind the following related topic:

- Operating the on-board computer(→ page 159)

Carrying out maintenance work regularly

NOTE Premature wear through failure to observe service due dates

Service work which is not carried out at the right time or incompletely can lead to increased wear and damage to the vehicle.

▶ Always observe the prescribed service intervals.

▶ Always have the prescribed service work carried out at a qualified specialist workshop.

Special service requirements

The prescribed service interval is based on normal vehicle use. Maintenance work will need to be performed more often than prescribed if the vehicle is operated under arduous conditions or increased loads.

Examples of arduous operating conditions:

- regular city driving with frequent intermediate stops
- mainly short-distance driving
- frequent operation in mountainous terrain or on poor road surfaces
- when the engine is often left idling for long periods
- operation in particularly dusty conditions and/or if air-recirculation mode is frequently used

In these or similar operating conditions, have the interior air filter, engine air cleaner, engine oil and oil filter etc. changed more frequently. If the vehicle is subjected to higher loads, the tires must be checked more frequently. Further information can be obtained at a qualified specialist workshop.

Battery disconnection periods

The ASSYST PLUS service interval display can only calculate the service due date when the battery is connected.

▶ Note down the service due date displayed on the Instrument Display before disconnecting the battery (→ page 173).

Engine compartment

Opening and closing the hood

WARNING Risk of accident if the engine hood is unlatched while driving

An unlocked engine hood may open up when the vehicle is in motion and block your view.

▶ Never unlatch the engine hood while driving.

▶ Before every trip, ensure that the engine hood is latched.

WARNING Danger of burns when opening the hood

If you open the hood when the engine has overheated or during a fire in the engine compartment, you could come into contact with hot gases or other escaping operating fluids.

▶ Before opening the hood, allow the engine to cool down.

▶ In the event of a fire in the engine compartment, keep the hood closed and call the fire service.

WARNING Risk of injury due to moving parts

Certain components in the engine compartment may continue to move or suddenly move again even after the ignition has been switched off, e.g. the cooler fan.

Make sure of the following before performing tasks in the engine compartment:

- ▶ Switch the ignition off.
- ▶ Never touch the danger zone surrounding moving component parts, e.g. the rotation area of the fan.
- ▶ Remove jewelry and watches.
- ▶ Keep items of clothing and hair away from moving parts.

WARNING Risk of injury from touching component parts under voltage

The ignition system and the fuel injection system work under high voltage. If you touch component parts which are under voltage, you could receive an electric shock.

- ▶ Never touch component parts of the ignition system or the fuel injection system when the ignition is switched on.

Live components of the fuel injection system include the injectors, for example.

Live components of the ignition system include the following:

- Ignition coils
- Spark plug connectors
- Diagnostic socket

WARNING Risk of burns from hot component parts in the engine compartment

Certain components in the engine compartment can be very hot, e.g. the engine, the radiator and parts of the exhaust system.

- ▶ Allow the engine to cool down and only touch component parts described in the following.

If you have to carry out any work in the engine compartment, touch only the following components:

- Hood
- Engine oil filler opening cap
- Washer fluid reservoir cap
- Coolant expansion reservoir cap

WARNING Risk of injury from using the windshield wipers while the engine hood is open

When the engine hood is open and the windshield wipers are set in motion, you can be trapped by the wiper linkage.

- ▶ Always switch off the windshield wipers and ignition before opening the engine hood.

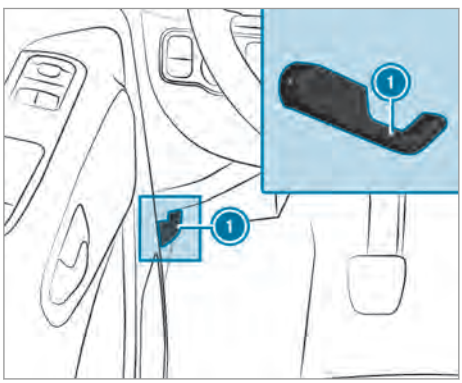

- ▶ Park the vehicle in a safe location and on a level surface if possible.
- ▶ Switch off the engine.
- ▶ Secure the vehicle against rolling away.

WARNING Risk of injury when the hood is opened

When you open the hood, it may suddenly drop into the end position.

There is a risk of injury for anyone in the hood's range of movement.

- ▶ Before releasing the hood, ensure that the support is firmly seated in the holder.
- ▶ Open the hood only when there is no-one in the hood's range of movement.

- ▶ **To open:** pull handle (1) to release the hood.
- ▶ Reach into the gap and push the hood catch handle upwards.
- ▶ Open the hood and hold it up.

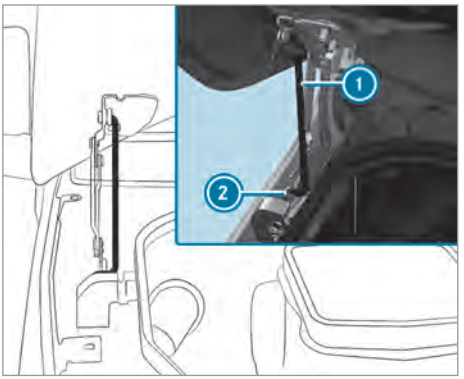

- Take support (1) from the bracket on the hood and pull it downwards.
- Insert the support into bracket below (2).

WARNING Risk of fire due to flammable material in the engine compartment or the exhaust system

Cloths or other flammable materials left in the engine compartment by mistake could ignite upon coming into contact with hot sections of the engine or exhaust system.

- Ensure that there are no flammable external materials in the engine compartment or on the exhaust system after maintenance work has been conducted.

WARNING Risk of accident and injury when opening and closing the engine hood

When opening or closing the engine hood, it may suddenly drop into the end position.

There is a risk of injury for anyone in the engine hood's range of movement.

- Only open or close the engine hood when there are no persons in the engine hood's range of movement.

NOTE Damage to the hood

Pushing the hood closed with your hands could damage it.

- To close the hood, let it drop from the specified height.

- **To close:** lift the hood slightly.
- Move support (1) to the bracket on the hood and apply light pressure to engage it.
- Lower the hood and let it drop from a height of approximately 0.5 ft (15 cm).
- If it is still possible to lift the hood a little, open the hood again and let it drop from a height of approximately 0.7 ft (20 cm) until it engages correctly.

Engine oil

Checking the engine oil level with a dipstick

WARNING Risk of burns from hot component parts in the engine compartment

Certain component parts in the engine compartment can be very hot, e.g. the engine, the cooler and parts of the exhaust system.

- Let the engine cool down and only touch the component parts described as follows.

Depending on the engine, the dipstick may be in varying locations in the engine compartment.

Waiting time before checking the oil level:

- engine at normal operating temperature: five minutes
- engine not at normal operating temperature (the engine was only started briefly, for example): 30 minutes

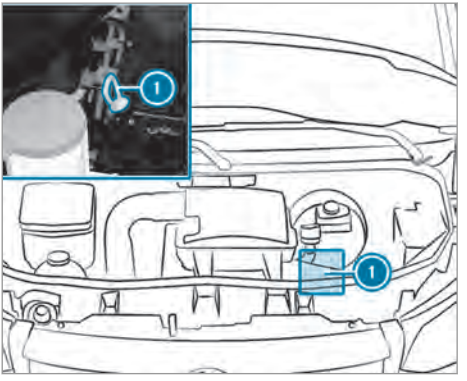

Dipstick (example)

- Park the vehicle on an even surface.
- Remove dipstick (1) and wipe it off.

- Slowly insert dipstick ① into the dipstick guide tube as far as it will go and pull it out after three seconds.
  - Oil level OK: the oil level is between the MIN and the MAX mark.
  - Oil level too low: the oil level is at the MIN mark or below.
- If the oil level is too low, add approx. 1.1 US qt (1 liter) engine oil.
- If the oil level is too high, drain off excess engine oil.
  Visit a qualified specialist workshop.

Checking the engine oil level with an on-board computer

Requirements:

- The vehicle is level during the measuring process.
- The hood is not open.
- Depending on the driving profile, the oil level can be displayed only after a driving time of up to 30 minutes and only when the ignition is switched on.

On-board computer:

Service ▸▸ Engine Oil Level

You will see one of the following messages in the multifunction display:

- Measuring Engine Oil Level...: measurement of the oil level not yet possible. Repeat the query after driving a maximum of 30 minutes.
- Engine Oil Level OK and the bar to display the oil level in the multifunction display is green and lies between "MIN" and "MAX": the oil level is OK.
- Engine Oil Level Drive until the engine is warm.: warm up the engine to operating temperature.
- Engine Oil Level Correct Measurement Only if Vehicle Is on Level Ground: park the vehicle on an even surface.
- Engine Oil Level Add 1,0 liq.gal. and the bar to display the oil level in the multifunction display is orange and lies below "MIN": add 1.1 US qt (1 l) of engine oil.
- Reduce Engine Oil Level and the bar displaying the oil level in the multifunction display is orange and lies above "MAX": drain off excess engine oil.
  Visit a qualified specialist workshop.
- For Engine Oil Level Switch Ignition On: switch on the ignition in order to check the engine oil level.
- Engine Oil Level System Inoperative: sensor is defective or not connected. Visit a qualified specialist workshop.
- Engine Oil Level System Currently Unavailable: close the hood.

ⓘ Vehicles with cold oil level displays: the oil level is automatically displayed on the multifunction display after the vehicle has been non-operational for an extended period. If it is not possible to measure the engine oil level, a relevant message will appear.

Adding engine oil

⚠ **WARNING** Risk of burns from hot component parts in the engine compartment

Certain components in the engine compartment can be very hot, e.g. the engine, the radiator and parts of the exhaust system.

- Allow the engine to cool down and only touch component parts described in the following.

⚠ **WARNING** Danger of burns when opening the hood

If you open the hood when the engine has overheated or during a fire in the engine compartment, you could come into contact with hot gases or other escaping operating fluids.

- Before opening the hood, allow the engine to cool down.
- In the event of a fire in the engine compartment, keep the hood closed and call the fire service.

If you have to carry out any work in the engine compartment, touch only the following components:

- Hood
- Engine oil filler opening cap
- Washer fluid reservoir cap
- Coolant expansion reservoir cap

WARNING Risk of fire and injury from engine oil

If engine oil comes into contact with hot component parts in the engine compartment, it may ignite.

- Make sure that no engine oil is spilled next to the filler opening.
- Allow the engine to cool off and thoroughly clean the engine oil from component parts before starting the vehicle.

NOTE Engine damage due to incorrect oil filter, incorrect oil or additive

- Do not use engine oil or an oil filter with specifications deviating from those required for the prescribed service intervals.

Mercedes-Benz recommends using original or tested replacement and service parts.

- Do not change the engine oil or oil filter in order to set change intervals longer than those prescribed.
- Do not use any additive.
- Follow the instructions on the service interval display for changing the engine oil.

NOTE Damage caused by adding too much engine oil

Too much engine oil can damage the engine or the catalytic converter.

- Have excess engine oil removed at a qualified specialist workshop.

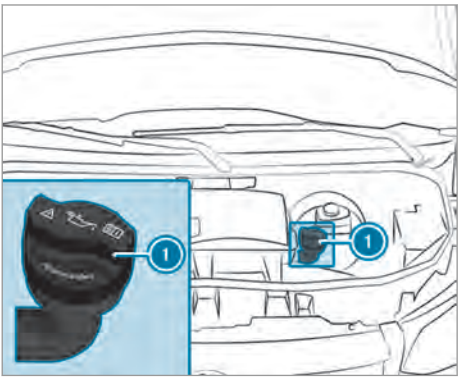

Engine OM651

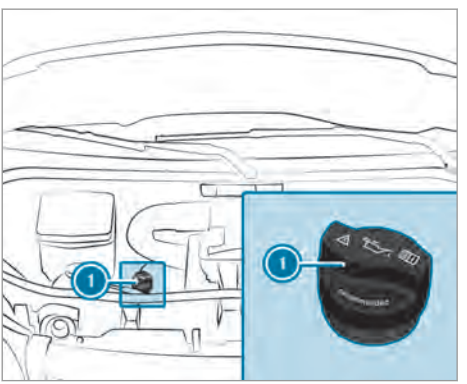

Engine OM642

- Turn cap (1) counter-clockwise and remove it.
- Add engine oil.
- Replace cap (1) and turn it clockwise until it engages.
- Check the oil level again . Check using the on-board computer (→ page 176), check with the oil dipstick (→ page 175).

Checking the coolant level

WARNING Risk of burns from hot component parts in the engine compartment

Certain components in the engine compartment can be very hot, e.g. the engine, the radiator and parts of the exhaust system.

- Allow the engine to cool down and only touch component parts described in the following.

If you have to carry out any work in the engine compartment, touch only the following components:

- Hood
- Engine oil filler opening cap
- Washer fluid reservoir cap
- Coolant expansion reservoir cap

WARNING Danger of burns when opening the hood

If you open the hood when the engine has overheated or during a fire in the engine compartment, you could come into contact with hot gases or other escaping operating fluids.

- Before opening the hood, allow the engine to cool down.
- In the event of a fire in the engine compartment, keep the hood closed and call the fire service.

WARNING Risk of scalding from hot coolant

The engine cooling system is pressurized, particularly when the engine is warm. If you open the cap, you could be scalded by hot coolant spraying out.

- Let the engine cool down before opening the cap.
- When opening the cap, wear protective gloves and safety glasses.
- Open the cap slowly to release pressure.

Allow the engine and the engine cooling system to cool down before checking the coolant level or refilling coolant.

NOTE Paintwork damage due to coolant

If coolant gets on painted surfaces, the paintwork can be damaged.

- Add coolant carefully.
- Remove spilled coolant.

Checking the coolant level

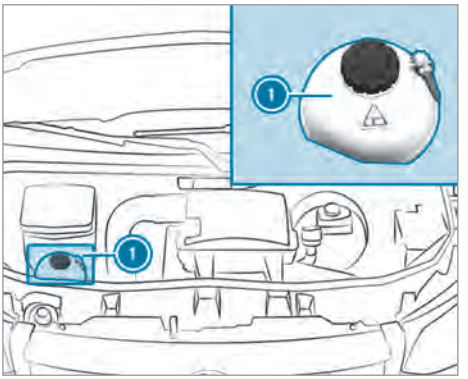

Example: coolant expansion reservoir

- Park the vehicle on an even surface.
- Open the hood (→ page 173).
- Slowly turn coolant expansion reservoir cap (1) half a turn counter-clockwise and allow excess pressure to escape.
- Turn coolant expansion reservoir cap (1) further and remove it.
- Check the coolant level.
  There is enough coolant in coolant expansion reservoir if the coolant reaches the MAX mark.

Adding coolant

- Refill the coolant to the MAX mark on the coolant expansion reservoir.

Only use coolant approved by Mercedes-Benz to avoid damaging the engine cooling system.

- Replace coolant expansion reservoir cap (1) and tighten in a clockwise direction.
- Start the engine.
- After approximately five minutes, switch off the engine again and allow it to cool down.
- Check the coolant level again and add coolant if necessary.

ⓘ Observe additional coolant information (→ page 239).

Filling up the windshield washer system

WARNING Risk of burns from hot component parts in the engine compartment

Certain components in the engine compartment can be very hot, e.g. the engine, the radiator and parts of the exhaust system.

▶ Allow the engine to cool down and only touch component parts described in the following.

If you have to carry out any work in the engine compartment, touch only the following components:

- Hood
- Engine oil filler opening cap
- Washer fluid reservoir cap
- Coolant expansion reservoir cap

WARNING Danger of burns when opening the hood

If you open the hood when the engine has overheated or during a fire in the engine compartment, you could come into contact with hot gases or other escaping operating fluids.

▶ Before opening the hood, allow the engine to cool down.

▶ In the event of a fire in the engine compartment, keep the hood closed and call the fire service.

WARNING - Risk of fire and injury from windshield washer concentrate

Windshield washer concentrate is highly flammable. It could ignite if it comes into contact with hot engine component parts or the exhaust system.

▶ Make sure that no windshield washer concentrate spills out next to the filler opening.

NOTE Damage to the exterior lighting due to unsuitable windshield washer fluid

Unsuitable windshield washer fluid may damage the plastic surface of the exterior lighting.

▶ Only use windshield washer fluids that are also suitable for use on plastic surfaces, e.g. MB SummerFit or MB WinterFit.

Adding washer fluid

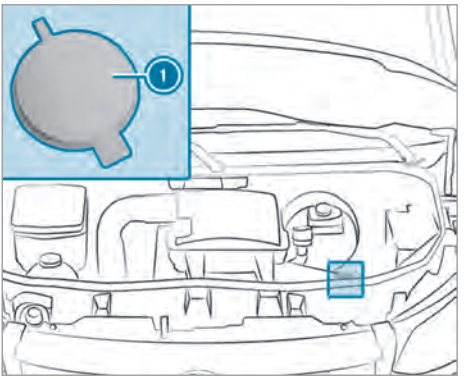

Washer fluid reservoir (example)

▶ Pre-mix the washer fluid in the correct mixing ratio in a container.

▶ Park the vehicle on a level surface and secure it against rolling away (→ page 132).

▶ Open the hood (→ page 173).

▶ Pull the cap of washer fluid container 1 upwards by the strap.

▶ Pour in the pre-mixed washer fluid.

▶ Press cap 1 onto the filler opening until it audibly engages.

▶ Close the hood (→ page 173).

ⓘ Mix the washer fluid with windshield washer concentrate all year round. Comply with the information about windshield washer fluid in the technical data (→ page 240).

ⓘ Comply with the further information about windshield washer fluid (→ page 240)

Cleaning the water drain valve of the air intake box

WARNING Risk of injury due to moving parts

Certain components in the engine compartment may continue to move or suddenly move again even after the ignition has been switched off, e.g. the cooler fan.

Make sure of the following before performing tasks in the engine compartment:

▶ Switch the ignition off.

- Never touch the danger zone surrounding moving component parts, e.g. the rotation area of the fan.
- Remove jewelry and watches.
- Keep items of clothing and hair away from moving parts.

WARNING Risk of burns from hot component parts in the engine compartment

Certain components in the engine compartment can be very hot, e.g. the engine, the radiator and parts of the exhaust system.

- Allow the engine to cool down and only touch component parts described in the following.

If you have to carry out any work in the engine compartment, touch only the following components:

- Hood
- Engine oil filler opening cap
- Washer fluid reservoir cap
- Coolant expansion reservoir cap

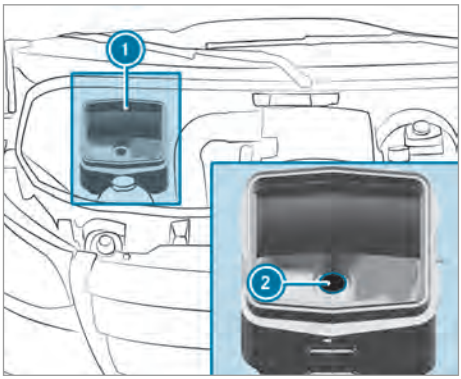

- Open the hood (→ page 173).
- Remove dirt from water drain valve 2 of air intake box 1.

Draining the fuel filter

WARNING Danger of fire and explosion due to fuel

Fuels are highly flammable.

- It is essential to avoid fire, open flames, smoking and creating sparks.
- Before filling up, switch off the engine, and, if applicable, the auxiliary heating.

WARNING Risk of fire and explosion due to fuel

Fuels are highly flammable. There is a risk of fire and explosion due to contact with hot component parts.

- Allow the engine and the exhaust system to cool down.

NOTE Engine damage due to delayed drainage of the fuel filter

Vehicles with a diesel engine: delayed drainage of the fuel filter can lead to engine damage.

If the indicator lamp lights up, drain the fuel filter immediately.

ENVIRONMENTAL NOTE Environmental pollution due to disposal in a non-environmentally-friendly manner

- Dispose of the water/fuel mixture in an environmentally-friendly manner.

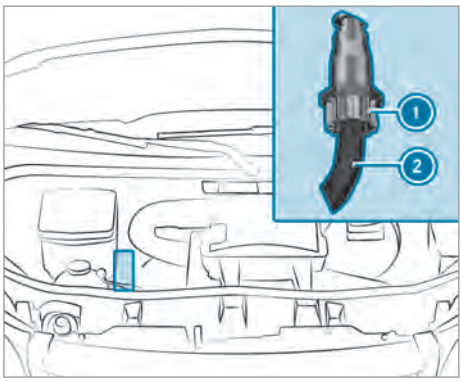

Motor OM642

- Park the vehicle in a safe location and secure it against rolling away.
- Switch off the auxiliary heating (→ page 100).
- Switch off the engine.
- Open the hood (→ page 173).

- Place a suitable collector beneath drain hose ②.
- Switch on the ignition.
- Open drain screw ① until the water/fuel mixture emerges from drain hose ②.
- Close drain screw ① as soon as around 0.2 qt (0.2 liter) of the water/fuel mixture has been collected.
  After 30 seconds, the electrical fuel pump automatically stops the discharge of the water/fuel mixture.
- After draining, switch off the ignition.
- Dispose of the collected water/fuel mixture in an environmentally responsible manner, e.g. at a qualified specialist workshop.
- Check that drain screw ① has been closed. If the engine is running while drain screw ① is open, you will lose fuel through drain hose ②.
- Close the hood (→ page 173).
- **The indicator lamp does not go out after draining:** drain the fuel filter again.
- **The indicator lamp does not go out after the second draining:** consult a qualified specialist workshop.

Mercedes-Benz recommends that you have the fuel filter drained at a qualified specialist workshop.

Cleaning and care

Notes on washing the vehicle in an automatic car wash

WARNING Risk of accident due to reduced braking effect after washing the vehicle

The braking effect is reduced after washing the vehicle.

- After the vehicle has been washed, brake carefully while paying attention to the traffic conditions until the braking effect has been fully restored.

NOTE Risk of damage to the paintwork and plastic components

If you wash your vehicle in Touchless Automatic Car Wash systems that use special cleaning agents, the cleaning agents used can damage the paintwork or plastic components of the vehicle.

- Do not wash the vehicle in Touchless Automatic Car Wash systems that use special cleaning agents.

Make sure that the automatic car wash is suitable for the size of the vehicle.

Before washing the vehicle in an automatic car wash, fold in the outside mirrors and remove any additional antennas. Otherwise, the outside mirrors, antennas or the vehicle itself could be damaged.

Make sure any additional antennas are re-installed and that the outside mirrors are fully folded out again when you leave the automatic car wash.

To avoid damage to your vehicle, observe the following before using an automatic car wash:

- the side windows and the sliding window are completely closed.
- the blower for ventilation and heating is switched off.
- the windshield wiper switch is in position 0.

If the vehicle is very dirty, wash off excess dirt before cleaning the vehicle in an automatic car wash.

ⓘ Removing the wax from the windshield and the wiper rubbers after washing the vehicle, will help avoid smearing and reduce wiper noise.

Notes on use of a power washer

WARNING Risk of accident when using high-pressure cleaning equipment with round-spray nozzles

The water jet from a round-spray nozzle (dirt grinder) may cause damage to tires and suspension components that is not visible.

Components damaged in this way may fail unexpectedly.

- Do not use high-pressure cleaning equipment with round-spray nozzles to clean your vehicle.
- Damaged tires or suspension components must be replaced immediately.

Never use a power washer in the vehicle interior. The pressurized water created by the power

washer and the associated spray could cause considerable damage to the vehicle.

To avoid damage to your vehicle, observe the following when using a power washer:

- maintain a minimum distance of 11.8 in (30 cm) to the vehicle when using 25° flat-spray nozzles and dirt grinders or 27.6 in (70 cm) when using round-spray nozzles and observe the information in the equipment manufacturer's operating instructions.
- do not direct the nozzle of the power washer directly at sensitive parts such as tires, slits, electrical components, batteries, light bulbs and ventilation slits.
- maintain a minimum distance of 19.7 in (50 cm) for a rear view camera.

Washing the vehicle by hand

Observe the legal requirements, for example in many countries washing by hand is only allowed at specially designated wash bays. In this case, make sure that a specially designated wash bay is used for washing by hand.

▶ Use a mild cleaning agent, e.g. car shampoo.

▶ Wash the vehicle with lukewarm water and a soft car sponge. When doing so, do not expose the vehicle to direct sunlight.

▶ Carefully spray the vehicle with water and dry off with a leather cloth. Be careful not to point the water jet directly towards the air inlet grilles. The blower should be switched off while doing so.

▶ Do not let the cleaning agent dry on the paintwork.

At the onset of winter, remove all traces of road salt deposits carefully and as soon as possible.

Notes on care of paint and matte finish

NOTE Paintwork damage and corrosion due to inadequate care

Failure to promptly and thoroughly remove dirt from bird droppings or other residue could result in paintwork damage and corrosion at a later date.

▶ Clean dirt off paint and matte finish thoroughly and as soon as possible.

Observe the following notes:

	Notes on cleaning and care	Avoiding paintwork damage
Paint	• Insect remains: soak with insect remover and then wash off. • Bird droppings: soak with water and then wash off. • Remove coolant, tree resin, oils, fuels and greases: rub gently with a cloth soaked in petroleum ether or lighter fluid. • Brake fluid: wash off with water. • Tar stains: use tar remover. • Wax: use a silicone remover.	• Do not affix stickers, films or similar. • Remove dirt as soon as possible.
Matte finish	• Only use care products approved for Mercedes-Benz.	• Do not polish the vehicle and alloy wheels. • Do not use a wash program that ends with a hot wax treatment in automatic car washes. • Do not use paint cleaners, buffing or polishing products, or gloss preservers, e.g. wax. • Have paint repairs carried out in a qualified specialist workshop only.

Notes on the care of vehicle parts

⚠ **WARNING** Risk of entrapment if the windshield wipers are switched on while the windshield is being cleaned

If the windshield wipers are set in motion while you are cleaning the windshield or wiper blades, you can be trapped by the wiper arm.

▶ Always switch off the windshield wipers and the ignition before cleaning the windshield or wiper blades.

⚠ **WARNING** Risk of burning from the tailpipe or tailpipe trim

The tailpipe and tailpipe trim can become very hot. If you come into contact with these car parts, you could burn yourself.

▶ Always be particularly careful when in the vicinity of the tailpipe and tailpipe trims and supervise children very closely when in this area.

▶ Before any contact, allow the car parts to cool down.

Observe the following notes:

	Notes on cleaning and care	Preventing damage to the vehicle
Wheels/rims	Use water and acid-free wheel cleaner.	• Do not use acidic wheel cleaners to remove brake dust. Otherwise, wheel bolts and brake components may be damaged. • To avoid corrosion of brake discs and brakepads, drive for a few minutes after cleaning before parking the vehicle. The brake discs and brake-pads warm up and dry out.
Windows	Clean windows inside and outside with a damp cloth and with a cleaning agent recommended for Mercedes-Benz .	Do not use dry cloths or abrasive or solvent-based cleaning agents to clean the inside of windows.
Wiper blades	Carefully clean the folded-away wiper blades with a damp cloth.	Do not clean the wiper blades too often.
Exterior lighting	Clean the lenses with a wet sponge and mild cleaning agent, e.g. car shampoo.	Only use cleaning agents or cloths suitable for plastic lenses.
Sensors	Clean the sensors in the front and rear bumper and in the radiator grill with a soft cloth and car shampoo.	When using a power washer, keep a minimum distance of 11.8 in (30 cm).
Rear view camera and **360° Camera**	Use clean water and a soft cloth to clean the camera lens.	Do not use a power washer.
Trailer hitch	• Remove traces of rust on the ball, e.g. with a wire brush. • Remove dirt with a lint-free cloth. • After cleaning, lightly oil or grease the ball head. • Observe the notes on care in the trailer hitch manufacturer's operating instructions.	Do not clean the ball neck with a power washer or solvent.
Sliding door	• Remove foreign objects from the vicinity of the contact plates and contact pins of the sliding door. • Clean the contact plates and contact pins with a mild cleaning agent and a soft cloth.	Do not oil or grease the contact plates and the contact pins.

	Notes on cleaning and care	Preventing damage to the vehicle
Steps	• Clean the electrically operated steps and their housing with a power washer. • After cleaning, spray the lateral guides with silicone spray. • Clean the steps in the bumper with a power washer.	Do not use oil or grease as a lubricant.
Aluminum dropsides	• Brush down the aluminum dropsides with water and a neutral or mild alkaline cleaning agent.	Do not use abrasive cleaning agents to clean the dropsides.

Notes on interior care

⚠ **WARNING** Risk of injury from plastic parts breaking off after the use of solvent-based care products

Care and cleaning products containing solvents can cause surfaces in the cockpit to become porous.

When the airbags are deployed, plastic parts may break away.

▶ Do not use any care or cleaning products containing solvents to clean the cockpit.

⚠ **WARNING** Risk of injury or death from bleached seat belts

Bleaching or dyeing seat belts can severely weaken them.

This can, for example, cause seat belts to tear or fail in an accident.

▶ Never bleach or dye seat belts.

Observe the following notes:

	Notes on cleaning and care	Preventing damage to the vehicle
Seat belts	Clean with lukewarm soapy water.	• Do not use chemical cleaning agents. • Do not dry the seat belt by heating above 176 °F (80 °C) or in direct sunlight.
Display	Clean the surface carefully with a microfiber cloth and LCD/TFT display care product.	• Switch off the display and let it cool down. • Do not use any other agents.
Plastic trim	• Clean with a damp microfiber cloth. • For heavy soiling: use care product recommended for Mercedes-Benz .	• Do not affix stickers, films or similar. • Do not allow to come into contact with cosmetics, insect repellent and sun creams.
Real wood/ trim elements	• Clean with a microfiber cloth. • Black piano-lacquer look: clean with a damp cloth and soapy water. • For heavy soiling: use care product recommended for Mercedes-Benz .	Do not use solvent-based cleaning agents, polishes or waxes.

	Notes on cleaning and care	Preventing damage to the vehicle
Headliner	Clean with a soft brush or dry shampoo.	
Cloth seat covers	Vacuum up dirt such as crumbs or dust and then use a damp microfiber cloth and a 1% soapsuds solution to clean the entire seat cover. Do not spot-clean. Use cleaning and care products recommended for Mercedes-Benz .	Do not use any oil-based cleaning and care products.
Imitation leather seat covers	Vacuum up dirt such as crumbs or dust and then use a damp cotton cloth and a 1% soapsuds solution to clean the entire seat cover. Do not spot-clean. Use cleaning and care products recommended for Mercedes-Benz .	Do not use a microfiber cloth. Do not use any oil-based cleaning and care products.
Genuine leather seat covers	Regularly vacuum up dirt such as crumbs or dust and then use a damp cotton cloth to clean the entire seat covers. For heavy soiling: use a leather care agent recommended by Mercedes-Benz for aftertreatment.	Do not use a microfiber cloth. Do not use any oil-based cleaning and care products.
Steering wheel and gear or selector lever	Clean with a damp cloth.	
Pedals and floor mats	Clean with a damp cloth.	Do not use any cleaning and care products.
Vehicle interior	Clean with a damp cloth.	• Do not use a power washer. • Allow the vehicle interior to dry completely after cleaning. • Do not allow liquids to penetrate into gaps or cavities.
Curtains	The curtains may only be dry cleaned.	Do not wash the curtains.

Emergency

Removing the safety vest

The safety vest is located in the stowage compartment in the driver's door.

▶ Remove the safety vest from the stowage compartment.

ⓘ Safety vests can also be stored in the stowage compartments of the rear doors and the front-passenger door.

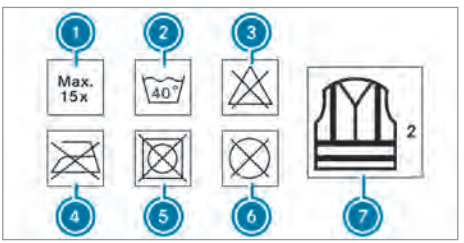

① Maximum number of washes
② Maximum wash temperature
③ Do not bleach
④ Do not iron
⑤ Do not tumble dry
⑥ Do not dry-clean
⑦ This is a class 2 vest

The safety vest only fulfills the legally required standards if it is the correct size and is completely closed.

Replace the safety vest:

- if damaged or if the reflex strips are dirty
- if the maximum permitted number of washes is exceeded
- if the safety vest's fluorescence has faded

Removing the first-aid kit (soft sided)

The first-aid kit is located in the stowage compartment in the front-passenger door.

▶ Remove the first-aid kit from the stowage compartment.

Removing the warning lamp

The warning lamp is located in the stowage compartment in the front-passenger door.

▶ Remove the warning lamp from the stowage compartment.

Emergency Call System

Information on the Emergency Call System

Your vehicle is equipped with the Emergency Call System ("eCall"). This feature can help save lives in the event of an accident. eCall in no way replaces assistance provided from dialing 911.

eCall only functions in areas where mobile phone coverage is available from the wireless service providers. Insufficient network coverage from the wireless service providers may result in an emergency call not being transmitted.

eCall is a standard feature in your Mercedes-Benz vehicle. In order to function as intended, the system relies on the transmission of data detailed in the "Emergency Call System data transfer" section that follows (→ page 188). To disable eCall, a customer must visit an authorized Mercedes-Benz Service department to deactivate the vehicle's communication module.

Deactivation of this module prevents the activation of any and all Mercedes PRO connect services. After the deactivation of eCall, automatic emergency call and manual emergency call will not be available.

The ignition must be switched on before an automatic emergency call can be made.

ⓘ eCall is activated at the factory.

ⓘ eCall can be deactivated by an authorized Mercedes-Benz dealer. Please note that in the event ownership of the vehicle is transferred to another owner in its deactivated state, eCall will remain deactivated unless the new owner visits an authorized Mercedes-Benz dealership to reactivate the system.

Emergency Call System

eCall can help to reduce the time between an accident and the arrival of emergency services at the site of the accident. It helps locate an accident site in places that are difficult to access. However, even if a vehicle is equipped with eCall, this does not mean the system is ON. As such, eCall does not replace dialing 911 in the event of an accident.

The emergency call can be made automatically (→ page 188) or manually (→ page 188). Only make emergency calls if you or others are in need of rescue. Do not make an emergency call in the event of a breakdown or a similar situation.

Triggering an automatic emergency call

Requirements:

- The ignition is switched on.
- The starter battery has sufficient charge.

If restraint systems such as airbags or Emergency Tensioning Devices have been activated after an accident, eCall may automatically initiate an emergency call.

The emergency call has been made:

- A voice connection is made to the Mercedes-Benz emergency call center.
- A message with accident data is transmitted to the Mercedes-Benz emergency call center.

  The Mercedes-Benz emergency call center can transmit the vehicle position data to one of the emergency call centers.

The SOS button in the overhead control panel flashes until the emergency call is finished.

It is not possible to immediately end an automatic emergency call.

If no connection can be made to the emergency services either, a corresponding message appears in the media display.

If no connection can be made to the emergency services:

▶ Dial the local emergency number on your mobile phone.

If an emergency call has been initiated:

- Remain in the vehicle if the road and traffic conditions permit you to do so until a voice connection is established with the emergency call center service provider.
- Based on the call, the operator decides whether it is necessary to call rescue teams and/or the police to the accident site.
- If no vehicle occupant answers, an ambulance is sent to the vehicle immediately.

Triggering a manual emergency call

▶ **Using the SOS button in the overhead control panel:** press the SOS button at least one second long.

The emergency call has been made:

- A voice connection is made to the Mercedes-Benz emergency call center.
- A message with accident data is transmitted to the Mercedes-Benz emergency call center.

  The Mercedes-Benz emergency call center can transmit the vehicle position data to one of the emergency call centers.
- Remain in the vehicle if the road and traffic conditions permit you to do so until a voice connection is established with the emergency call center service provider.

Transmitted data with the emergency call

Data transmitted by the eCall includes but is not limited to:

- Vehicle's GPS position data
- GPS position data on the route (a few hundred meters before the incident)
- Direction of travel
- Vehicle identification number
- Vehicle drive type
- Estimated number of people in the vehicle
- Whether Mercedes PRO connect is available or not
- Whether the emergency call was initiated manually or automatically
- Time of the accident

Data transmitted is vehicle information. For any questions about the collection, use and sharing of the eCall system data, please contact MBUSA's Customer Assistance Center at 800-FORMERC.

For Canada, please contact MBC's Customer Assistance Center at 1-800-387-0100.

Customer requests for covered information should be submitted via the same channels.

For accident clarification purposes, the following measures can be taken up to an hour after the emergency call has been initiated:

- The current vehicle position can be determined
- A voice connection to the vehicle occupants can be established

Flat tire

Notes on flat tires

⚠ **WARNING** Risk of an accident when driving with a flat tire

A flat tire greatly impairs driving characteristics, as well as steering and braking.

▶ Do not drive with a flat tire.
▶ Remove the flat tire and install the spare wheel or consult a qualified specialist workshop.

In the event of a flat tire you have the following possibilities depending on your vehicle's equipment:

- **Vehicles with Mercedes PRO connect:** in the event of a flat tire, you can call Roadside Assistance via the Roadside Assistance call button in the overhead control panel (→ page 164).
- **All vehicles:** change the wheel (→ page 221).

Battery

Notes on the 12 V battery

⚠ **WARNING** Risk of an accident due to work carried out incorrectly on the battery

Work carried out incorrectly on the battery can, for example, lead to a short circuit. This can lead to function restrictions in safety-relevant systems, for example the lighting system, ABS (anti-lock braking system) or ESP® (Electronic Stability Program). The operating safety of your vehicle may be restricted.

You could lose control of the vehicle in the following situations:

- when braking
- in the event of abrupt steering maneuvers and/or when the vehicle's speed is not adapted to the road conditions

▶ In the event of a short circuit or a similar incident, contact a qualified specialist workshop immediately.
▶ Do not continue driving.
▶ Always have work on the battery carried out at a qualified specialist workshop.

- Further information on ABS (→ page 137)
- Further information on ESP®(→ page 138)

Mercedes-Benz recommends that you have the 12 V battery replaced at a qualified specialist workshop, e.g. at an authorized Mercedes-Benz Center.

Should you want to replace the battery yourself, observe the following information:

- Always replace a defective battery with a battery which fulfills the vehicle's specific requirements.
- Use detachable parts such as the vent hose, elbow fitting or terminal cover from the battery to be replaced.
- Make sure that the vent hose is always connected to its original opening on the battery side.

  Install the existing or newly supplied stop plugs.

  Otherwise, gases or battery acid could escape.
- Make sure that the detachable parts are connected in the same way as before.

For safety reasons, Mercedes-Benz recommends that you only use batteries that have been tested and approved for your vehicle by Mercedes-Benz. These batteries provide increased impact protection to prevent vehicle occupants from suffering acid burns should the battery be damaged in an accident.

⚠ **WARNING** Risk of explosion due to electrostatic charge

Electrostatic charge can cause sparks which may ignite the highly flammable gas mixture in the battery.

▶ To discharge any electrostatic charge that may have built up, touch the metal vehicle body before handling the battery.

The highly flammable gas mixture is created while the battery is charging and when jump-starting.

⚠ **WARNING** Danger of chemical burns from the battery acid

Battery acid is caustic.

▶ Avoid contact with the skin, eyes or clothing.
▶ Do not lean over the battery.
▶ Do not inhale battery gases.
▶ Keep children away from the battery.
▶ Immediately rinse battery acid off thoroughly with plenty of clean water and seek medical attention immediately.

ENVIRONMENTAL NOTE Environmental damage caused by improper disposal of batteries

Batteries contain pollutants. It is illegal to dispose of them with the household rubbish.

▶

Dispose of batteries in an environmentally responsible manner. Take discharged batteries to a qualified specialist workshop or to a collection point for used batteries.

If the 12 V battery has to be connected, contact a qualified specialist workshop.

Observe the safety notes and protective measures when handling batteries.

Risk of explosion

Fire, open flames and smoking are prohibited when handling the battery. Avoid creating sparks.

Electrolyte or battery acid is corrosive. Avoid contact with the skin, eyes and clothing. Wear suitable protective clothing, in particular gloves, an apron and a safety mask. Immediately rinse electrolyte acid splashes off with clean water. If necessary, seek medical advice.

Wear eye protection.

Keep children at a safe distance.

Observe these Operating Instructions.

If you do not use the vehicle for a long period or drive short distances regularly:

- connect the battery to a charger recommended for Mercedes-Benz.
- consult a qualified specialist workshop to disconnect the battery

Starting assistance and charging the 12 V battery

▶ Always use the jump-start connection point in the engine compartment when charging the battery and jump-starting.

NOTE Damaging the battery through overvoltage

When charging using a battery charger without a maximum charging voltage, the battery or the vehicle electronics may be damaged.

▶ Only use battery chargers with a maximum charging voltage of 14.8 V.

WARNING Risk of explosion from hydrogen gas igniting

A battery generates hydrogen gas during the charging process. If there is a short circuit or sparks start to form, there is a danger of the hydrogen gas igniting.

▶ Make sure that the positive terminal of the connected battery does not come into contact with vehicle parts.

▶ Never place metal objects or tools on a battery.

▶ When connecting and disconnecting the battery, you must observe the described order for the battery clamps.

▶ When giving starting assistance, always make sure that you only connect battery terminals with identical polarity.

▶ During starting assistance, you must observe the described order for connecting and disconnecting the jumper cables.

▶ Do not connect or disconnect the battery clamps while the engine is running.

WARNING Risk of explosion during charging process and starting assistance

During the charging process and starting assistance, the battery may release an explosive gas mixture.

- ▶ Avoid fire, open flames, creating sparks and smoking.
- ▶ Make sure that there is sufficient ventilation during the charging process and during starting assistance.
- ▶ Do not lean over a battery.

WARNING Risk of explosion from a frozen battery

A discharged battery may freeze at temperatures slightly above or below freezing point.

During starting assistance or battery charging, battery gas may be released.

- ▶ Always thaw a frozen battery out first before charging it or performing starting assistance.

If the warning/indicator lamps do not light up in the instrument display around or below freezing point, it is very likely that the discharged battery has frozen.

In this case, observe the following points:

- do not give the vehicle starting assistance or charge the battery
- the service life of a battery that has been thawed may be reduced drastically
- the start-up behavior may deteriorate, particularly at low temperatures
- it is recommended that you have a thawed battery checked at a qualified specialist workshop

NOTE Damage caused by numerous or extended attempts to start the engine

Numerous or extended attempts to start the engine may damage the catalytic converter due to non-combusted fuel.

- ▶ Avoid numerous and extended attempts to start the engine.

Observe the following points during starting assistance and when charging the battery:

- only use undamaged jumper cables/charging cables with a sufficient cross-section and insulated terminal clamps
- non-insulated parts of the terminal clamps must not come into contact with other metal parts while the jumper cables/charging cables are connected to the battery/jump-start connection point
- the jumper cables/charging cable must not come into contact with any parts which may move when the engine is running
- always make sure that neither you nor the battery is electrostatically charged
- always keep away from fire and open flames
- do not lean over a battery
- **when charging:** only use a battery charger that has been tested and approved by Mercedes-Benz and read the operating instructions for your charger before charging the battery.

Observe the additional following points during starting assistance:

- starting assistance may only be provided using batteries with a nominal voltage of 12 V
- the vehicles must not touch each other
- **vehicles with a gasoline engine:** only perform starting assistance when the engine and exhaust system are cold

- ▶ **Vehicles with a battery main switch:** check whether the battery main switch is switched on (→ page 114).
- ▶ Secure the vehicle using the parking brake.
- ▶ **Vehicles with automatic transmission:** shift the transmission to position P.
- ▶ Switch off the ignition and all electrical consumers.
- ▶ Open the hood (→ page 173).

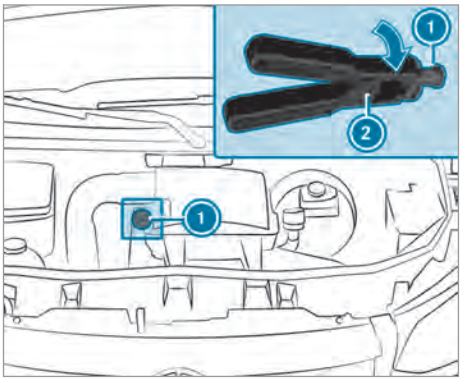

Example: jump-start connection point

ⓘ **Right-hand-drive vehicles:** the jump-start connection points may be on the opposite side.

- Remove the cover from the positive terminal on the donor battery.
- First, connect the positive terminal clamp of the jumper cables/charging cables to the positive terminal of the other vehicle's battery.
- With positive terminal clamp ② of the jumper cable, slide the red protective cap on jump-start connection point ① back with a clockwise turn.
- Connect the positive terminal clamp to the positive terminal of jump-start connection point ①.
- **During starting assistance:** start the engine of the donor vehicle and let it run at idle speed.
- Connect the negative terminal of the donor battery to the ground point of your own vehicle with the jumper cable/charging cable. Begin with the donor battery.
- **During starting assistance:** start the engine on your own vehicle.
- **When charging:** start the charging process.
- **During starting assistance:** let the engine run for a few minutes.
- **During starting assistance:** before disconnecting the jumper cable, switch on an electrical consumer on your own vehicle, e.g. the rear window heater or lighting.

When the starting assistance/charging process is complete:

- First, remove the jumper cables/charging cables from the ground point and negative terminal of the other vehicle's battery, then from the positive terminal of jump-start connection point ① and the positive terminal of the other vehicle's battery. Each time, begin at the contacts on your own vehicle.
  The red protective cap springs back to its initial position when positive terminal clamp ② is disconnected from jump-start connection point ①.

Further information can be obtained at a qualified specialist workshop.

Installing/removing the floor covering (vehicles with rear wheel drive)

⚠ **WARNING** Risk of accident due to objects in the driver's footwell

Objects in the driver's footwell may impede pedal travel or block a depressed pedal.

This jeopardizes the operating and road safety of the vehicle.

- Stow all objects in the vehicle securely so that they cannot get into the driver's footwell.
- Ensure floor mats and carpets cannot slip and provide sufficient room for the pedals.
- Do not lay multiple floor mats or carpets on top of one another.

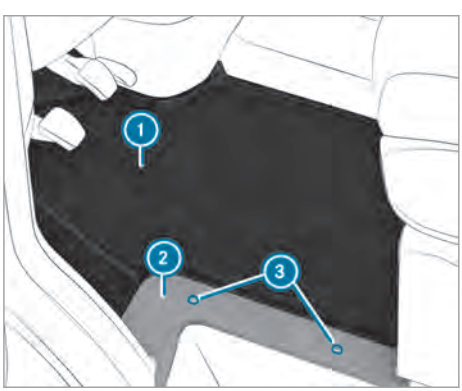

- Switch off all electrical consumers.
- **To remove:** unscrew screws ③ and remove trim ②.
- Remove floor covering ①.

- **To install:** insert floor covering ① and align it at the base of the driver's seat and at the door sill.
- Put trim ② in place and screw screws ③ back in.

Disconnecting the starter battery

! NOTE Damage to the electrical assembly

By disconnecting the starter battery before the engine is switched off and the key is removed from the ignition lock, electrical assemblies could be damaged.

- Switch off the engine and remove the key from the ignition lock. Then, release the battery clamps of the starter battery.
- Always disconnect the starter battery in the battery case in the left footwell first. Otherwise, electrical assemblies, e.g. the alternator, could be damaged.

! NOTE Damage to the vehicle's electronics

If you do not disconnect the battery as described here, the vehicle's electronics could be damaged.

- Always disconnect the starter battery in following the sequence, and do not reverse the battery terminals under any circumstances. Otherwise, the vehicle's electronics could be damaged.

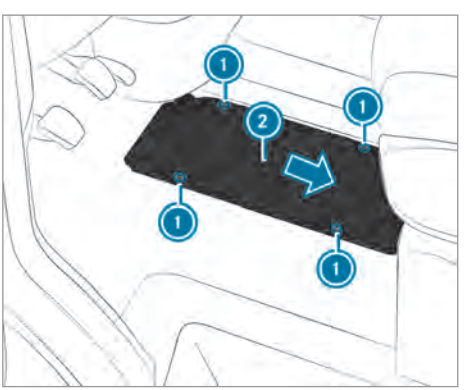

Vehicles with rear wheel drive

If the vehicle is expected to be parked up or out of use for over three weeks, disconnect the batteries. This will prevent battery discharge caused by quiescent current consumers.

- **Vehicles with a battery main switch:** switch off the main switch of the battery .
- **Vehicles without a battery main switch:** switch off all electrical consumers.
- Switch off the engine and the power supply.
- Remove the floor covering (→ page 192).
- Remove screws ① and slide battery cover ② in the direction of the arrow.
  The screws must protrude over the larger recesses.
- Remove battery cover ② upwards.

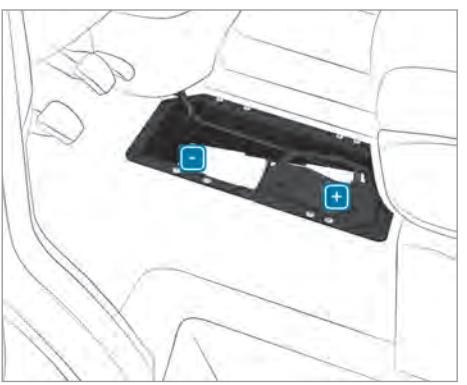

- First loosen and remove the negative terminal clamp on the battery so that the clamp is no longer in contact with the terminal.
- Remove the positive terminal clamp cover.
- Loosen the positive terminal clamp and fold it up to the side, together with the prefuse box.

Removing/installing the starter battery

Vehicles with rear wheel drive: removing the starter battery

- Disconnect the starter battery (→ page 193).

▶ Remove breather hose ① with the connector bracket from the connection on the degassing cover.

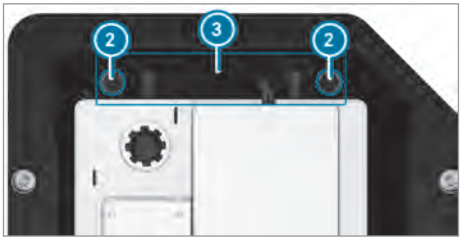

▶ Pull out and remove screws ② of bracket ③ upwards.

▶ Slide the starter battery from its anchorage in the direction of travel.

▶ Fold the bars of the starter battery upwards and remove the starter battery from the battery box.

Vehicles with rear wheel drive: installing the starter battery

▶ When reconnecting the starter battery, observe the safety measures and protection notes (→ page 190).

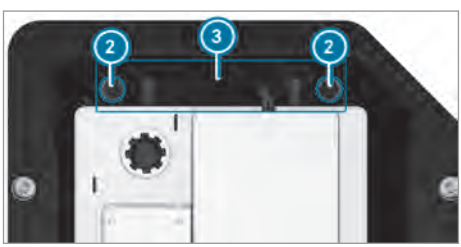

▶ Insert the starter battery into the battery box.

▶ Fold down the bars of the starter battery.

▶ Slide the starter battery into its anchorage in the opposite direction to the direction of travel.

▶ Insert bracket ③.

▶ Tighten screws ② on bracket ③ which holds the battery in place.

▶ Attach breather hose ① with the connector bracket to the connection of the ventilation cover.

▶ Reconnect the starter battery (→ page 193).

Mercedes-Benz recommends that you have the starter battery replaced at a qualified specialist workshop, e.g. an authorized Mercedes-Benz Center.

If you want to replace the starter battery yourself, observe the following notes:

- Always replace a defective starter battery with a starter battery which meets the specific requirements of the vehicle.
- Carry over detachable parts such as the vent hose, elbow fitting or terminal cover from the starter battery to be replaced.
- Make sure that the vent hose is always connected to its original opening on the battery side.

  Install the existing or newly supplied stop plugs.

  Otherwise, gases or battery acid could escape.
- Make sure that the detachable parts are connected in the same way as before.

Disconnecting the auxiliary battery in the engine compartment

! NOTE Damage to the electrical assembly

By disconnecting the starter battery before the engine is switched off and the key is removed from the ignition lock, electrical assemblies could be damaged.

▶ Switch off the engine and remove the key from the ignition lock. Then, release the battery clamps of the starter battery.

▶ Always disconnect the starter battery in the battery case in the left footwell first.

Otherwise, electrical assemblies, e.g. the alternator, could be damaged.

NOTE Damage to the vehicle's electronics

Incorrectly disconnecting the auxiliary battery can cause damage to the vehicle's electronics.

▶ Always disconnect the auxiliary battery as described in the following sequence. Do not reverse the battery terminals under any circumstances.

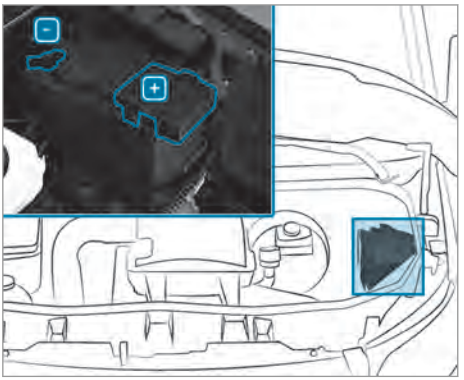

▶ Observe the safety measures and protection notices when disconnecting the auxiliary battery (→ page 190).

▶ Switch off all electrical consumers.

▶ Switch off the engine and the power supply.

▶ Open the hood (→ page 173).

▶ First loosen and remove the negative terminal clamp on the auxiliary battery so that the clamp is no longer in contact with the terminal.

▶ Remove the positive terminal clamp cover.

▶ Loosen and remove the positive terminal clamp.

Towing or tow-starting

Overview of permissible towing methods

In the event of a breakdown, Mercedes-Benz recommends that you have the vehicle transported instead of towed.

NOTE Damage to the vehicle due to towing away incorrectly

▶ Observe the instructions and notes on towing away.

ⓘ **Vehicles with automatic transmission and rear wheel drive:** if there is a malfunction, the automatic transmission may be locked in position P.
If the automatic transmission cannot be shifted to position N, transport the vehicle (→ page 197). A towing vehicle with lifting equipment is required for vehicle transport.

Permissible towing methods

	Both axles on the ground	**Front axle raised**	**Rear axle raised**
Vehicles with automatic transmission and rear wheel drive	Yes, no further than 31 miles (50 km) at 31 mph (50 km/h)	Yes, no further than 31 miles (50 km) at 31 mph (50 km/h)	Yes, if the steering wheel is fixed in the center position with a steering wheel lock
Vehicles with all-wheel drive	Yes, no further than 31 miles (50 km) at 31 mph (50 km/h)	No	No

Towing with a raised axle: towing should be performed by a towing company.

Towing away the vehicle with both axles on the ground

- Observe the notes on permissible towing methods (→ page 195).
- Make sure that the battery is connected and charged.

When the battery is discharged, the following situations occur:

- The engine cannot be started.
- It is not possible to release or apply the electric parking brake.
- **Vehicles with automatic transmission:** the automatic transmission cannot be shifted to position N or P.

NOTE Damage due to towing away at excessively high speeds or over long distances

The drivetrain could be damaged when towing at excessively high speeds or over long distances.

- A towing speed of 30 mph (50 km/h) must not be exceeded.
- A towing distance of 30 miles (50 km) must not be exceeded.

Vehicles with automatic transmission and rear wheel drive: if there is a malfunction, the automatic transmission may be locked in position P.
If the automatic transmission cannot be shifted to position N, transport the vehicle (→ page 197). A towing vehicle with lifting equipment is required for vehicle transport.

WARNING Risk of accident when towing a vehicle which is too heavy

If the vehicle being tow-started or towed away is heavier than the permissible gross mass of your vehicle, the following situations can occur:

- The towing eye may become detached.
- The vehicle/trailer combination may swerve or even overturn.

- If another vehicle is tow-started or towed away, its weight must not exceed the permissible gross mass of your own vehicle.

If a vehicle needs to be towed or tow started, its weight should not be greater that the permissible gross mass of the towing vehicle.

- Information on the vehicle's permissible gross mass can be found on the vehicle identification plate .
- **Vehicles with automatic transmission:** do not open the driver's or front-passenger door, as the automatic transmission will automatically shift to position P.
- Install the towing eye (→ page 198).
- Secure the towing device.

NOTE Damage due to incorrect connection

- Only connect the tow rope or tow bar to the towing eyes.

You can also secure the towing device to the trailer hitch.

NOTE Damage and risk of accident when towing with a tow rope

There is a risk of an accident if you do not observe safety and protective measures when towing using a tow rope.

Observe the following points when towing with a tow rope:

- Secure the tow rope on the same side on both vehicles, if possible.
- Make sure the tow rope does not exceed the legally prescribed length.
- Mark the tow rope in the middle, e.g. with a white cloth (30 x 30 cm). This makes other road users aware that a vehicle is being towed.
- Observe the brake lamps of the towing vehicle while driving. Always maintain a distance that ensures the tow rope does not sag.
- Do not use steel cables or chains to tow your vehicle. Otherwise, you could damage the vehicle.

- Deactivate automatic locking (→ page 45).
- Do not activate the HOLD function.
- Deactivate the tow-away alarm (→ page 57).

- Deactivate Active Brake Assist .
- **Vehicles with automatic transmission:** shift the automatic transmission to position N.
- Release the parking brake.

WARNING Risk of accident due to limited safety-related functions during the towing process

Safety-related functions are limited or no longer available in the following situations:

- the ignition is switched off.
- the brake system or power steering system is malfunctioning.
- the energy supply or the on-board electrical system is malfunctioning.

When your vehicle is then towed away, significantly more effort may be required to steer and brake than is normally required.

- Use a tow bar.
- Make sure that the steering wheel can move freely, before towing the vehicle away.

NOTE Damage due to excessive tractive power

If you pull away sharply, the tractive power may be too high and the vehicles could be damaged.

- Pull away slowly and smoothly.

Towing a vehicle with the front or rear axle raised

NOTE Damage when the ignition is switched on

If you leave the ignition switched on when towing the vehicle with the front or rear axle raised, ESP® actuation can damage the brake system.

- The ignition must be switched off.

NOTE Damage due to incorrect removal or installation of the propeller shafts

When installing the propeller shafts, they can be damaged if you do not use new screws.

Always use new screws when installing the propeller shafts.

Only have the propeller shafts installed or removed by qualified, skilled personnel.

ⓘ If the front axle is damaged, raise the vehicle at the front axle and if the rear axle is damaged, raise the vehicle at the rear axle.

ⓘ **Vehicles with automatic transmission and rear wheel drive:** if there is a malfunction, the automatic transmission may be locked in position P.
If the automatic transmission cannot be shifted to position N, transport the vehicle (→ page 197). A towing vehicle with lifting equipment is required for vehicle transport.

- Observe the notes on permissible towing methods (→ page 195).
- The propeller shafts to the drive axles must be removed if the maximum permissible towing distance is exceeded.
- **Vehicles with automatic transmission:** shift the automatic transmission to position N.
- Release the parking brake.
- Switch off the ignition.

Loading the vehicle for transport

- Observe the notes on towing away (→ page 196) (→ page 197).
- Connect the tow bar to the towing eye to load the vehicle.
- **Vehicles with automatic transmission:** shift the automatic transmission to position N.

ⓘ **Vehicles with automatic transmission:** in the event of damage to the electrics, the automatic transmission may be locked in position P. To shift to position N, provide the on-board electrical system with power (→ page 190).

- Load the vehicle onto the transporter.
- **Vehicles with automatic transmission:** shift the automatic transmission to position P.
- Use the parking brake to secure the vehicle against rolling away.
- Only secure the vehicle by the wheels.

Vehicles with all-wheel drive/vehicles with automatic transmission

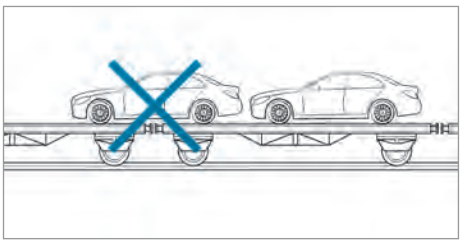

▶ Make sure that the front and rear axles come to rest on the same transportation vehicle.

! NOTE Damage to the drivetrain due to incorrect positioning

▶ Do not position the vehicle above the connection point of the transport vehicle.

! NOTE Vehicle damage due to improper loading

An all-wheel drive vehicle may be damaged if it is tilted, pushed or moved while being loaded using a hydraulic platform.

▶ When loading a vehicle with all-wheel drive, the vehicle should only be moved and positioned by its own power.

▶ The vehicle and the surface it is positioned on should no longer be moved when the key is removed or if the door is open.

Towing eye storage location

The towing eye is located in the vehicle tool kit in the front-passenger footwell (⟶ page 200).

Installing/removing the towing eye

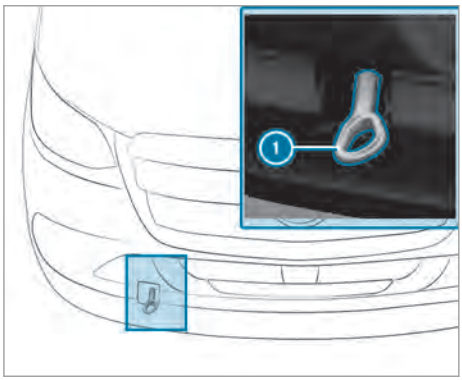

Installing and removing the front towing eye

▶ **To install the front towing eye:** press the top of the cover and remove the cover.

▶ Screw in towing eye ① clockwise to the stop and tighten.

▶ **To remove the front towing eye:** unscrew towing eye ① counter-clockwise.

▶ Insert the cover with the tabs at the top and push in at the bottom until the cover engages.

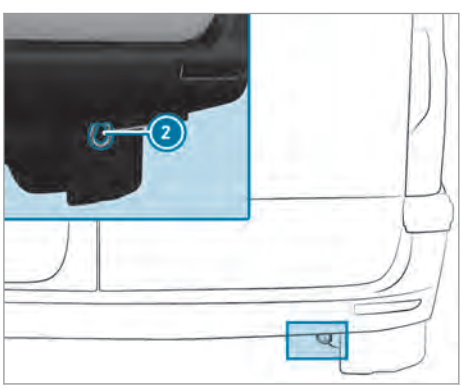

Rear towing eye (vehicles with passenger vehicle approval)

ⓘ Rear towing eye ② is permanently attached to the vehicle.

! NOTE Damage due to incorrect use of the towing eye

When a towing eye is used to recover a vehicle, the vehicle may be damaged in the process.

▶ Only use the towing eye to tow away or tow start the vehicle.

Tow starting vehicle (emergency engine start)

Vehicles with automatic transmission

NOTE Damage to the automatic transmission due to tow starting

The automatic transmission may be damaged in the process of tow starting vehicles with automatic transmission.

▶ Vehicles with automatic transmission must not be tow started.

▶ Do not tow start vehicles with automatic transmission.

Electrical fuses

Notes on electrical fuses

WARNING Risk of accident and injury due to overloaded lines

If you manipulate or bridge a faulty fuse or if you replace it with a fuse with a higher amperage, the electric line could be overloaded.

This could result in a fire.

▶ Always replace faulty fuses with specified new fuses containing the correct amperage.

NOTE Damage due to incorrect fuses

Electrical components or systems could be damaged by incorrect fuses.

▶ Only use fuses which have been approved by Mercedes-Benz and which have the correct fuse rating.

The electrical fuses in your vehicle switch off defective circuits. If a fuse blows, all the components on the circuit and their functions will cease to operate.

Blown fuses must be replaced with fuses of an equivalent specification, which you can determine by the color and fuse rating. The fuse allocation chart and further information on the electric fuses and relays can be found in the "Fuse allocation chart" supplement.

NOTE Damage or malfunctions caused by moisture

Moisture may cause damage to the electrical system or cause it to malfunction.

▶ When the fuse box is open, make sure that no moisture can enter the fuse box.

▶ When closing the fuse box, make sure that the seal of the lid is positioned correctly on the fuse box.

If the new fuse which has been inserted also blows, have the cause traced and rectified at a qualified specialist workshop.

Make sure of the following before replacing a fuse:

- the vehicle is secured such that it does not roll away
- all electrical consumers are switched off
- the ignition is switched off

The fuses are located in various fuse boxes:

- fuse box in the front-passenger footwell (→ page 200)
- fuse box in the seat base of the driver's seat (→ page 199)

Opening the fuse box in the seat base of the driver's seat

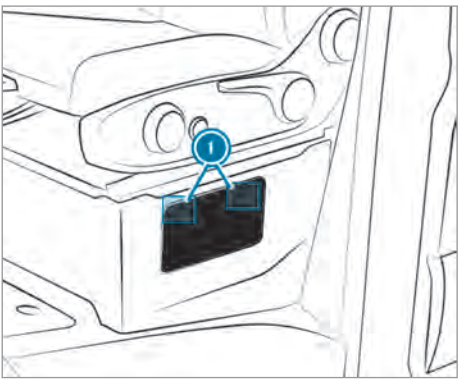

▶ **To open:** press down and unclip fasteners (1) on the cover.

▶ Remove the cover.

▶ **To close:** press the cover firmly into the seat base until fasteners (1) clip in.

Opening the fuse box in the front-passenger footwell

▶ Unlocking and removing the stowage compartment cover in the front-passenger footwell (→ page 200).

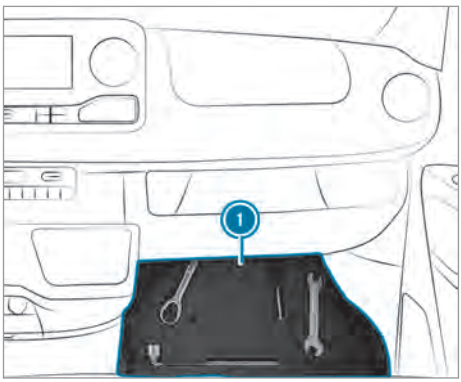

▶ Remove insert ① with the vehicle tool kit.

Vehicle tool kit

Information on the vehicle tool kit

The vehicle tool kit is located in the stowage compartment in the footwell on the front-passenger side (→ page 200).

The vehicle tool kit contains:

- a towing eye
- a screwdriver with Torx, Phillips and slotted bits

The vehicle tool kit may also contain the following, for example:

- an open-end wrench
- a wheel wrench

Unlocking and removing the stowage compartment cover

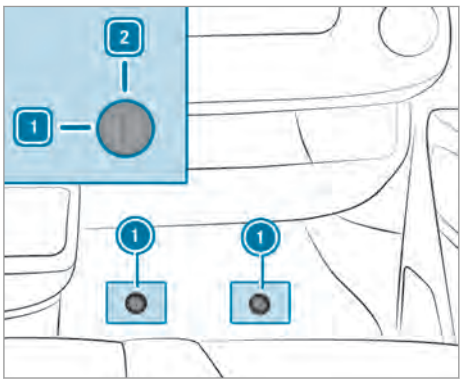

▶ Remove the rubber mat from the front-passenger footwell.

▶ **To unlock:** turn the quick-release fastener ① counter-clockwise to position 1.

▶ Slightly raise and pull out the cover.

Inserting and locking the cover

▶ Slide in the cover and press it downwards.

▶ Press down the quick-release fastener ① until it engages.

▶ **To lock:** turn the quick-release fastener ① clockwise to position 2.

Removing the vehicle tool kit

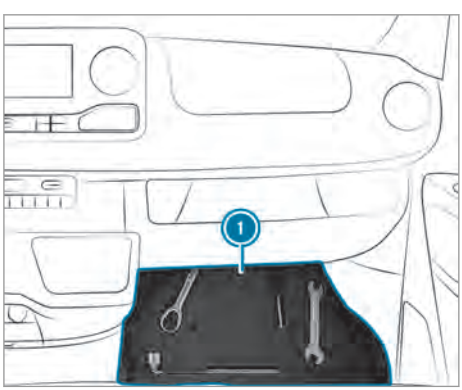

▶ Remove the vehicle tool kit from stowage compartment ①.

Hydraulic jack

Information on the hydraulic jack

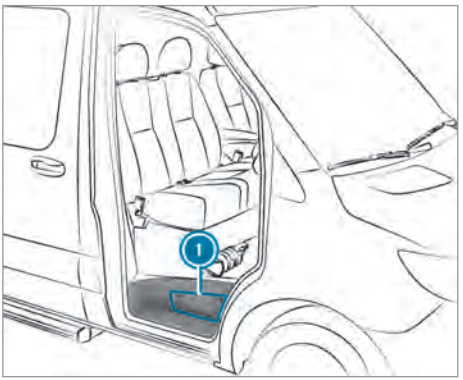

The hydraulic jack is located in side compartment (1) above the co-driver door step.

The jack has a maximum weight of 16.5 lbs (7.5 kg) depending on the vehicle's equipment. You will find the maximum load capacity of the jack stated on the adhesive label attached to the jack. If there is a malfunction, please contact a qualified specialist workshop.

Jack maintenance:

- Clean and grease all moving parts after use.
- Extend and retract the pistons fully every six months.

Removing the pump lever rod and the jack

Requirements:

- The co-driver door is open.

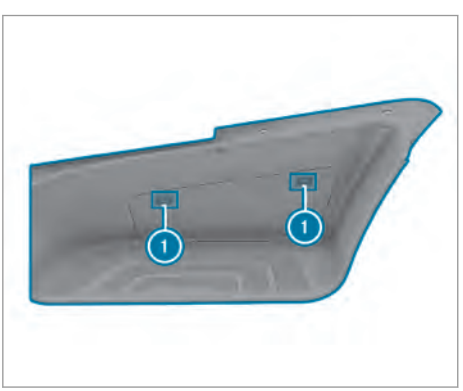

▶ **To open:** press down and unclip fasteners (1) on the cover.

▶ Remove the cover.

▶ Pull out the holder completely and place it on the step.

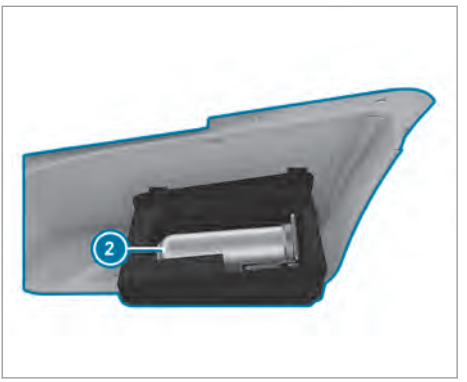

▶ Remove jack (2) and unclip the pump lever rod.

ⓘ It is recommended to wear gloves for this work.

▶ **To close:** press the cover firmly into the door sill so that fasteners (1) engage.

Information on noise or unusual driving characteristics

While driving, pay attention to vibrations, noises and unusual driving characteristics, e.g. pulling to one side. This may indicate damage to the wheels or tires. If you suspect that a tire is defective, reduce your speed. Stop the vehicle as soon as possible to check if wheels and tires have been damaged or are no longer functioning properly. Hidden tire damage could also be causing the unusual driving characteristics. If no signs of damage can be detected, have the tires and wheels checked at a qualified specialist workshop.

Notes on regularly inspecting wheels and tires

⚠ **WARNING** Risk of accident from damaged tires

Damaged tires can cause tire pressure loss.

As a result, you could lose control of your vehicle.

▶ Check the tires regularly for signs of damage and replace any damaged tires immediately.

Check the wheels and tires of your vehicle for damage regularly, i.e. at least every two weeks, as well as after driving off-road or on rough roads. Damaged wheels can lead to a loss of tire pressure.

Look out for the following types of damage, for example:

- cuts in the tires
- punctures in the tires
- tears in the tires
- bulges on tires
- deformation or severe corrosion on wheels

⚠ **WARNING** Risk of hydroplaning because tire tread is too low

Insufficient tire tread will result in reduced tire traction. The tire tread will no longer be able to dissipate water.

This increases the risk of hydroplaning on wet road surfaces, particularly when traveling at an inappropriate speed.

If the tire pressure is too high or too low, tires may exhibit different levels of wear at different locations on the tire tread.

▶ Regularly check the tire tread depth and the condition of the tire tread across the entire width of all tires.

Minimum tread depth for use:

- In summer: 1/8 in (3 mm)
- In winter: 1/6 in (4 mm)

▶ For safety reasons, have the tires replaced before the legally prescribed limit for the minimum tire tread depth is reached.

Conduct the following checks regularly on all wheels, at least once a month or as required, e.g. before a long journey or when driving off-road:

- check the tire pressure (→ page 204)
- check the valve caps

  Valves must be protected from moisture and dirt with valve caps specifically approved by Mercedes-Benz for your vehicle.
- visually inspect the tread depth and the tire tread across the whole tire width

  For use in summer, the minimum tread depth is 1/8 in (3 mm) and for use in winter 1/6 in (4 mm).

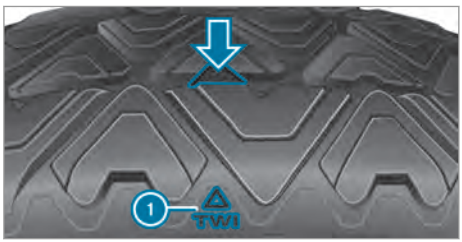

Markings ① show in which places the bar indicators (arrow) are integrated into the tire tread. They are visible as soon as the tread depth is approximately 1/16 in (1.6 mm).

Information on driving with summer tires

At temperatures below 50 °F (10 °C) summer tires lose elasticity and therefore traction and braking power. Change the tires on your vehicle to M+S tires. Using summer tires at very cold temperatures could cause tears to form, thereby damaging the tires permanently. Mercedes-Benz

cannot accept responsibility for this type of damage.

Always observe the maximum permissible speed specified for the summer tires you have installed (→ page 215).

Once you have installed the summer tires:

- Check the tire pressure (→ page 204)
- Restart the tire pressure monitor (→ page 210)

Information on M+S tires

Use winter tires or all-season tires at temperatures below 50 °F (10 °C). Both types of tire are identified by the M+S marking.

Only winter tires bearing the snowflake symbol in addition to the M+S marking provide the best possible grip in wintry road conditions.

Only these tires will allow driving safety systems such as ABS and ESP® to function optimally in winter. These tires have been developed specifically for driving in snow.

Use M+S tires of the same make and tread on all wheels to maintain safe handling characteristics.

Always observe the maximum permissible speed specified for the M+S tires you have installed (→ page 215).

If you install M+S tires that have a lower maximum permissible speed than the maximum design speed of the vehicle, affix an appropriate warning sign in the driver's field of vision. You can obtain this at a qualified specialist workshop.

Once you have installed the winter tires, take the following measures:

- Check the tire pressure (→ page 204)
- Restart the tire pressure monitor (→ page 210)

Notes on snow chains

WARNING Risk of accident due to incorrect installation of snow chains

Vehicles with rear-wheel drive: if you have installed snow chains to the front wheels, they may drag against the vehicle body or chassis components.

This could cause damage to the vehicle or the tires.

▶ Never install snow chains on the front wheels.

▶ Only install snow chains on the rear wheels in pairs.

▶ **Vehicles with twin tires:** install the snow chains to the outer wheels.

WARNING Risk of accident due to unsuitable snow chains

Vehicles with all-wheel drive do not have sufficient clearance on the front axle for commercially available snow chains.

When you install commercially available snow chains, the snow chains may come loose and damage chassis components or brake hoses.

▶ Only install snow chains approved by Mercedes-Benz for these tires.

For safety reasons, Mercedes-Benz recommends that you only use snow chains that have been checked and approved. You can obtain information about snow chains from any qualified specialist workshop.

NOTE Damage to the wheel trim from mounted snow chains

If snow chains are mounted to steel wheels, the wheel trims can be damaged.

▶ Remove the wheel trims of steel wheels before mounting snow chains.

Observe the following notes when using snow chains:

- Snow chains are only permissible for certain wheel/tire combinations. You can obtain information on them at a qualified specialist workshop.
- For safety reasons, only use snow chains that have been specifically approved for your vehicle by Mercedes-Benz, or snow chains with the same quality standard.
- The snow chains must be retightened after driving approximately 0.6 miles (1 km). This is the only way to ensure the snow chains are optimally seated with clearance to adjacent components.
- **Vehicles with all-wheel drive:** install snow chains on the wheels on the rear axle. On vehicles with twin tires, install the snow chains on the outer wheels. Observe the manufacturer's installation instructions.

- Use snow chains only when the road surface is completely snow-covered. Remove the snow chains as soon as possible when you come to a road that is not snow-covered.
- Local regulations may restrict the use of snow chains. Observe the applicable regulations before installing snow chains.
- Activate all-wheel drive before driving off with snow chains (→ page 119).
- If snow chains are installed, the maximum permissible speed is 30 mph (50 km/h).
- **Vehicles with Parking Assist:** do not use Parking Assist PARKTRONIC if snow chains are installed.

ⓘ You can deactivate ESP® to pull away . This allows the wheels to spin, achieving an increased driving force.

Tire pressure

Notes on tire pressure

⚠ **WARNING** Risk of accident due to insufficient or excessive tire pressure

Underinflated or overinflated tires pose the following risks:

- The tires may burst, especially as the load and vehicle speed increase.
- The tires may wear excessively and/or unevenly, which may greatly impair tire traction.
- The driving characteristics, as well as steering and braking, may be greatly impaired.

▶ Comply with the recommended tire pressure and check the tire pressure of all tires including the spare wheel regularly:

- at least once a month
- when the load changes
- before embarking on a longer journey
- if operating conditions change, e.g. off-road driving

▶ Adjust the tire pressure as necessary.

Driving with tire pressure that is too high or too low can:

- Shorten the service life of the tires.
- Cause increased tire damage.
- Adversely affect handling characteristics and thus driving safety, e.g. due to hydroplaning.

⚠ **WARNING** Risk of an accident due to insufficient tire pressure

Tires with pressure that is too low can overheat and burst as a result.

In addition, they also suffer from excessive and/or irregular wear, which can significantly impair the braking properties and the handling characteristics.

▶ Avoid excessively low tire pressures in all the tires, including the spare wheel.

Tire pressure which is too low can cause:

- Tire malfunctions as a result of overheating
- Impaired handling characteristics
- Irregular wear
- Increased fuel consumption

⚠ **WARNING** Risk of accident from excessive tire pressure

Tires with excessively high pressure can burst because they are damaged more easily by highway fill, pot holes etc.

In addition, they also suffer from irregular wear, which can significantly impair the braking properties and the handling characteristics.

▶ Avoid excessively high tire pressures in all the tires, including the spare wheel.

Excessively high tire pressure can result in:

- Increased braking distance
- Impaired handling characteristics
- Irregular wear
- Impaired driving comfort
- Susceptibility to damage

⚠ **WARNING** Risk of accident caused by repeated drop in tire pressure

If the tire pressure drops repeatedly, the wheel, valve or tire may be damaged.

Insufficient tire pressure can cause the tires to burst.

▶ Inspect the tire for signs of foreign objects.

- ▶ Check whether the wheel or valve has a leak.
- ▶ If you are unable to rectify the damage, contact a qualified specialist workshop.

You can find information on recommended tire pressures for the vehicle's factory-installed tires on the following labels:

- Tire and Loading Information placard on the B-pillar of your vehicle (→ page 210).
- Tire pressure table on the inside of the fuel filler flap .

Observe the maximum tire pressure (→ page 215).

Use a suitable tire pressure gauge to check the tire pressure. The outer appearance of a tire does not permit any reliable conclusion about the tire pressure.

ENVIRONMENTAL NOTE Environmental damage due to insufficient or excessive tire pressure

Note that insufficient or excessive tire pressure shortens the service life of the tires.

- ▶ For this reason, check the tire pressure regularly; at least every 14 days.

Vehicles with a tire pressure monitor: you can also check the tire pressure using the on-board computer.

Only correct tire pressure when the tires are cold. Conditions for cold tires:

- The vehicle has been parked with the tires out of direct sunlight for at least three hours.
- The vehicle has traveled less than 1 mile (1.6 km).

A rise in the tire temperature of 18 °F (10 °C) increases the tire pressure by approx. 10 kPa (0.1 bar/1.5 psi). Take this into account when checking the tire pressure of warm tires.

The tire pressure recommended for increased load/speed in the tire pressure table may affect the ride comfort.

WARNING Risk of accident due to unsuitable accessories on tire valve

If you mount unsuitable accessories onto tire valves, the tire valves may be overloaded and malfunction, which can cause a loss of tire pressure. Aftermarket tire pressure monitoring systems will cause the tire valve to remain open, depending on the design. This can also result in a loss of tire pressure.

- ▶ Only screw standard valve caps or valve caps specifically approved by Mercedes-Benz for your vehicle onto the tire valve.

Notes on towing a trailer

The applicable tire pressures for the tires of the rear axle is always the recommended tire pressure for a full load.

Tire pressure table

The tire pressure table can be found on the seat base or on the B-pillar on the driver's side.

ⓘ The data shown in the images is example data.

The tire pressure table shows the recommended tire pressure for the tires installed at the factory on this vehicle. The recommended tire pressures are valid for cold tires and different vehicle load conditions.

If one or more tire sizes precede a tire pressure, the tire pressure information following is only valid for those tire sizes.

If the preceding tire sizes are supplemented by the symbol, the tire pressure information following shows alternative tire pressures.

The load conditions "partially laden" and "fully laden" are defined in the table for varying weights.

Some tire pressure tables only show the rim diameter instead of the complete tire size, e.g. **R16**. The rim diameter is part of the tire size and can be found on the side wall of the tire (→ page 215).

Front axle tire pressures on vehicles with all-wheel/rear wheel drive and single tires
Max. front axle load 4101 lbs (1860 kg)

Tires/disc wheel	Vehicle load	Max. front axle load 4101 lbs (1860 kg)
LT245/75R16 120/116Q	Fully laden	320 kPa (3.2 bar/46 psi)

Front axle tire pressures on vehicles with rear wheel drive and single tires
Max. front axle load 4409 lbs (2000 kg)

Tires/disc wheel	Vehicle load	Max. front axle load 4409 lbs (2000 kg)
LT245/75R16 120/116Q	Fully laden	360 kPa (3.6 bar/52 psi) [1]

[1] Only valid for vehicles with a long wheelbase 171 in (4350 mm) and a permissible gross weight of over 7716 lbs (3.5 t).

Rear axle tire pressures on vehicles with all-wheel/rear wheel drive and single tires
Max. rear axle load 5357 lbs (2430 kg)

Tires/disc wheel	Vehicle load	Max. rear axle load 5357 lbs (2430 kg)
LT245/75R16 120/116Q	Fully laden	480 kPa (4.8 bar/70 psi)
LT245/75R16 120/116Q	Partially laden [2]	420 kPa (4.2 bar/61 psi) [2]

[2] It is only permissible to use this reduced tire pressure if it can be guaranteed by weighing the vehicle that the rear axle load of 4960 lbs (2250 kg) will not be exceeded. In case of doubt, inflate to 480 kPa (4.8 bar/70 psi).

Front axle tire pressures on vehicles with all-wheel/rear wheel drive and twin tires
Max. front axle load 4079 lbs (1850 kg)

Tires/disc wheel	Vehicle load	Max. front axle load 4079 lbs (1850 kg)
LT215/85R16 115/112Q	Fully laden	380 kPa (3.8 bar/55 psi)

Max. front axle load 4409 lbs (2000 kg)

Tires/disc wheel	Vehicle load	Max. front axle load 4409 lbs (2000 kg)
LT215/85R16 115/112Q	Fully laden	420 kPa (4.2 bar/61 psi)

Max. front axle load 4630 lbs (2100 kg)

Tires/disc wheel	Vehicle load	Max. front axle load 4630 lbs (2100 kg)
LT215/85R16 115/112Q	Fully laden	450 kPa (4.5 bar/65 psi)

Rear axle tire pressures on vehicles with all-wheel/rear wheel drive and twin tires
Max. rear axle load 7055 lbs (3200 kg)

Tires/disc wheel	Vehicle load	Max. rear axle load up to 7055 lbs (3200 kg)
LT215/85R16 115/112Q	Fully laden	370 kPa (3.7 bar/54 psi)

Max. rear axle load 7716 lbs (3500 kg)

Tires/disc wheel	Vehicle load	Max. rear axle load 7716 lbs (3500 kg)
LT215/85R16 115/112Q	Fully laden	400 kPa (4.0 bar/58 psi)

Max. rear axle load 7937 lbs (3600 kg)

Tires/disc wheel	Vehicle load	Max. rear axle load 7937 lbs (3600 kg)
LT215/85R16 115/112Q	Fully laden	420 kPa (4.2 bar/61 psi)

Front axle tire pressures on vehicles with Super Single tires
Max. front axle load 4079 lbs (1850 kg)

Tires/disc wheel	Vehicle load	Max. front axle load 4079 lbs (1850 kg)
225/75R16C 121/120R (122L)	Fully laden	340 kPa (3.4 bar/49 psi)

Max. front axle load 4409 lbs (2000 kg)

Tires/disc wheel	Vehicle load	Max. front axle load 4409 lbs (2000 kg)
225/75R16C 121/120R (122L)	Fully laden	370 kPa (3.7 bar/54 psi)

Rear axle tire pressures on vehicles with rear wheel drive and Super Single tires
Max. rear axle load 7055 lbs (3200 kg)

Tires/disc wheel	Vehicle load	Max. rear axle load 7055 lbs (3200 kg)
225/75R16C 121/120R (122L)	Fully laden	690 kPa (6.9 bar/100 psi) [3]
285/65R16C 131R	Fully laden	460 kPa (4.6 bar/67 psi)

Max. rear axle load 7716 lbs (3500 kg)

Tires/disc wheel	Vehicle load	Max. rear axle load 7716 lbs (3500 kg)
225/75R16C 121/120R (122L)	Fully laden	690 kPa (6.9 bar/100 psi) [3]
285/65R16C 131R	Fully laden	520 kPa (5.2 bar/75 psi)

[3] Valid to use for a short time as a spare wheel on the rear axle for a maximum distance of 62 miles (100 km) and a maximum speed of 34 mph (55 km/h).

Be sure to also observe the following further related subjects:

- Notes on tire pressure (→ page 204)
- Tire and Loading Information placard (→ page 210)
- Maximum tire pressure (→ page 215)

Tire pressure monitor

Function of tire pressure monitor on single tires

⚠ **DANGER** Risk of accident due to incorrect tire pressure

Every tire, including the spare (if provided), should be checked when cold at least once a month and inflated to the pressure recommended by the vehicle manufacturer (see Tire and Loading Information placard on the B-pillar on the driver's side or the tire pressure label on the inside of the fuel filler flap of your vehicle). If your vehicle has tires of a different size than the size indicated on the Tire and Loading Information placard or the tire pressure table, you need to determine the proper tire pressure for those tires.

As an added safety feature, your vehicle has been equipped with a tire pressure monitoring system (TPMS) that illuminates a low tire pressure indicator lamp when one or more of your tires are significantly underinflated. Accordingly, if the low tire pressure indicator lamp lights up, you should stop and check your tires as soon as possible, and inflate them to the proper pressure. Driving on a significantly underinflated tire causes the tire to overheat and can lead to tire failure. Underinflation also increases fuel consumption and reduces tire tread life, and may affect the vehicle's handling and braking ability. Please note that the TPMS is not a substitute for proper tire maintenance, and it is the driver's responsibility to maintain correct tire pressure, even if underinflation has not reached the level to trigger illumination of the TPMS low tire pressure indicator lamp.

Your vehicle has also been equipped with a TPMS malfunction indicator to indicate when the system is not operating properly. The TPMS malfunction indicator is combined with the low tire pressure indicator lamp. When the system detects a malfunction, the indicator lamp will flash for approximately a minute and then remain continuously illuminated. This sequence will continue upon subsequent vehicle start-ups as long as the malfunction exists.

When the malfunction indicator is illuminated, the system may not be able to detect or signal low tire pressure as intended. TPMS malfunctions may occur for a variety of reasons, including the installation of incompatible

replacement or alternate tires or wheels on the vehicle that prevent the TPMS from functioning properly.

Always check the TPMS malfunction warning lamp after replacing one or more tires or wheels on your vehicle to ensure that the replacement or alternate tires and wheels allow the TPMS to continue to function properly.

The system checks the tire pressure and the temperature of the tires installed to the vehicle by means of a tire pressure sensor.

New tire pressure sensors, e.g. in winter tires, are automatically taught-in the first time they are driven.

The tire pressure and the tire temperature appear in the multifunction display (→ page 160).

If there is a substantial loss of tire pressure, a warning is issued:

- via display messages (→ page 260)
- via the [(!)] warning lamp in the instrument cluster

It is the driver's responsibility to set the tire pressure to the recommended cold tire pressure suitable for the operating situation. Set the tire pressure for cold tires using a tire pressure gauge. Note that the correct tire pressure for the current operating situation must first be taught-in to the tire pressure monitoring system.

In most cases, the tire pressure monitoring system will automatically update the new reference values after you have changed the tire pressure. You can, however, also update the reference values by restarting the tire pressure monitoring system manually (→ page 210).

System limitations

The system may be impaired or may not function in the following situations:

- if the tire pressure is set incorrectly
- if there is a sudden pressure loss caused by a foreign object penetrating the tire, for example
- if there is a malfunction caused by another radio signal source

Make sure to observe the following further related subject:

- Notes on tire pressure (→ page 204)

Checking the tire pressure with the tire pressure monitoring system

Requirements:

- The ignition is switched on

On-board computer:

Service ▸▸ Tires

One of the following displays appears:

- The current tire pressure and tire temperature of the individual wheels

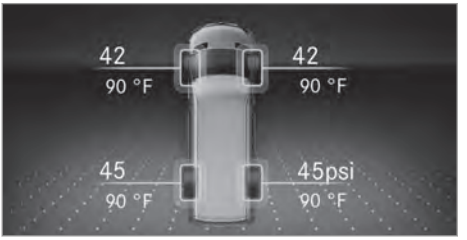

Instrument Display with color display

- The current tire pressure for each wheel

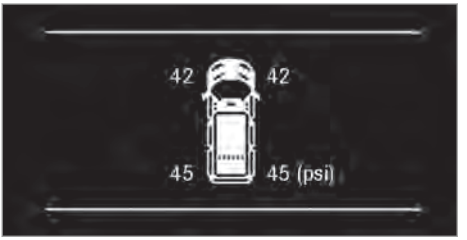

Instrument Display with black and white display

- Tire pressure will be displayed after driving a few minutes: the teach-in process of the system is not yet complete. The tire pressure are already being monitored.

▶ Compare the tire pressure with the recommended tire pressure for the current operating condition . Observe the notes on tire temperature (→ page 204).

ⓘ The values displayed in the multifunction display may deviate from those of the tire pressure gauge as they refer to sea level. At high altitudes, the tire pressure values indicated by a pressure gauge are higher than those shown by the on-board computer. In this case, do not reduce the tire pressure.

Make sure to observe the following further related subject:

- Notes on tire pressure (→ page 204)

Restarting the tire pressure monitor

Requirements:

- The recommended tire pressure is correctly set for the respective operating condition on each of the wheels (→ page 204).
- **Restart the tire pressure monitoring system in the following situations:**
  - The tire pressure has changed.
  - The wheels or tires have been changed or newly installed.

On-board computer:

Service ▸▸ Tires

▶ Scroll down in the menu.
The Use Current Pressures as New Reference Values message appears in the multifunction display.

▶ Confirm the message to initiate a restart.
The Tire Press. Monitor Restarted message appears in the multifunction display.

Current warning messages are deleted and the [ ] yellow warning lamp goes out.

After you have driven for a few minutes, the system checks whether the current tire pressures are within the specified range. The current tire pressures are then accepted as reference values and monitored.

Make sure to observe the following further related subject:

- Notes on tire pressure (→ page 204)

Radio-equipment approval of the tire pressure monitoring system

Radio equipment approval numbers

Country	Radio equipment approval number
Canada	IC: 4008C-TSSRE4A Operation is subject to the following two conditions: (1) this device may not cause harmful interference, and (2) this device must accept any interference received, including interference that may cause undesired operation.
Mexico	Model: TSSRE4A & TSSSG4G6, IFETEL: RLVHUTS17-0806
USA	FCC ID: YGOTSSRE4A This device complies with Part 15 of the FCC Rules. Operation is subject to the following two conditions: (1) this device may not cause harmful interference, and (2) this device must accept any interference received, including interference that may cause undesired operation. WARNING: Any changes or modification not expressly approved by the party responsible for compliance could void the user's authority to operate this equipment.

Loading the vehicle

Tire and Loading Information placard

⚠ **WARNING** Risk of an accident when driving with an overloaded tire

Overloaded tires may overheat and burst as a consequence. Overloaded tires can also impair the steering and handling characteristics and lead to brake failure.

▶ Observe the load rating of the tires.

▶ The load rating must be at least half the gross axle weight rating of the vehicle. Mercedes-Benz recommends you use the load-bearing index, which is given in the vehicle documents.

▶ Never overload the tires by exceeding the maximum load.

Only vehicles with a gross vehicle weight of less than 10,000 lbs (4,536 kg) have a Tire and Loading Information placard on the B-pillar on the driver's side.

① Tire and Loading Information placard

ⓘ The data shown in the illustration is sample data.

The Tire and Loading Information placard shows:

- The maximum number of seats indicates the maximum number of occupants permitted to travel in the vehicle.
- The maximum permissible load equals the gross weight of all vehicle occupants, the luggage and cargo.
- The recommended tire pressures for cold tires. The recommended tire pressures apply to the maximum permissible load and up to the maximum permissible speed of the vehicle.

Also observe the following information:

- The information about permissible weights on the vehicle identification plate (→ page 231).
- The information about tire pressure on the tire pressure table .

Additional related subjects:

- Determining the maximum load (→ page 211).
- Notes on tire pressure (→ page 204).

Determining the maximum load

The following steps have been developed as required of all manufacturers under Title 49, Code of U.S. Federal Regulations, Part 575 in accordance with the "National Traffic and Motor Vehicle Safety Act of 1966."

▶ **Step 1:** locate the statement, "The combined weight of occupants and cargo should never exceed XXX kg or XXX lbs." on the Tire and Loading Information placard of your vehicle.

▶ **Step 2:** determine the combined weight of the driver and passengers that will be traveling in your vehicle.

▶ **Step 3:** subtract the combined weight of the driver and passengers from XXX kg or XXX lbs.

▶ **Step 4:** the resulting figure equals the permissible amount of cargo and luggage load capacity. For example, if the "XXX" amount equals 1,400 lbs and there will be five 150 lb passengers in your vehicle, the amount of available cargo and luggage load capacity is 650 lbs (1,400 – 750 (5 x 150) = 650 lbs).

▶ **Step 5:** determine the combined weight of luggage and cargo being loaded on the vehicle. For safety reasons, this weight must not exceed the cargo and luggage load capacity calculated in step 4.

Even if you have calculated the total load carefully, you should still make sure that the maximum permissible gross weight and the maximum gross axle weight rating of your vehicle are not exceeded. Information for this can be found on the vehicle identification plate.

▶ Weigh the laden vehicle, including driver, passengers and load, on a suitable vehicle weighbridge.
The measured values must not exceed the maximum permitted values listed on the vehicle identification plate.

Additional related subjects:

- Sample calculation for determining the maximum load (→ page 212)
- Tire and Loading Information placard (→ page 210)
- Tire pressure table
- Vehicle identification plate

Sample calculation for determining the maximum load

The following table has examples of how to calculate total and cargo load capacities with varying seating configurations and different numbers and sizes of occupants. The following examples use a maximum load of 1,500 lbs (680 kg). **This value is for illustrative purposes only.** Make sure you are using the actual load limit for your vehicle stated on your vehicle's Tire and Loading Information placard (→ page 210).

The higher the weight of all the occupants, the smaller the maximum load for luggage.

Step 1

	Example 1	Example 2
Combined maximum weight of occupants and load (data from the Tire and Loading Information placard)	1500 lbs (680 kg)	1500 lbs (680 kg)

Step 2

	Example 1	Example 2
Number of people in the vehicle (driver and occupants)	5	1
Distribution of the occupants	Front: 2 Rear: 3	Front: 1
Weight of occupants	Occupant 1: 150 lbs (68 kg) Occupant 2: 180 lbs (82 kg) Occupant 3: 160 lbs (73 kg) Occupant 4: 140 lbs (63 kg) Occupant 5: 120 lbs (54 kg)	Occupant 1: 200 lbs (91 kg)
Total weight of all occupants	750 lbs (340 kg)	200 lbs (91 kg)

Step 3

	Example 1	Example 2
Permissible load (maximum gross vehicle weight rating from the Tire and Loading Information placard minus the gross weight of all occupants)	1500 lbs (680 kg) - 750 lbs (340 kg) = 750 lbs (340 kg)	1500 lbs (680 kg) - 200 lbs (91 kg) = 1300 lbs (589 kg)

Tire labeling

Overview of tire labeling

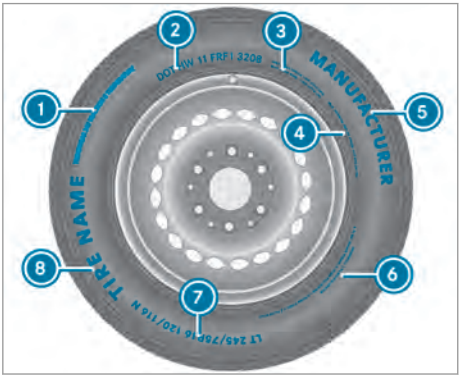

1. Uniform Tire Quality Grading Standards (→ page 213)
2. DOT (Department of Transportation), (TIN) Tire Identification Number (→ page 214)
3. Maximum tire load (→ page 214)
4. Maximum tire pressure (→ page 215)
5. Manufacturer
6. Characteristics of the tire (→ page 215)
7. Tire size designation, load-bearing capacity, speed rating and load index (→ page 215)
8. Tire name

ⓘ The data shown in the illustration is sample data.

Information on tire quality grades

According to the requirements of the U.S. Department of Transportation's "Uniform Tire Quality Grading Standards" tire manufacturers must grade their tires using the following three performance factors:

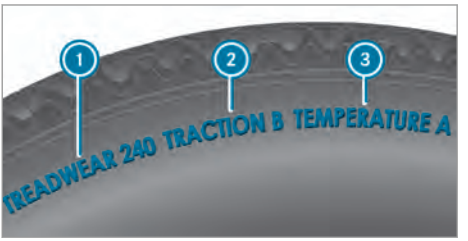

1. Tread wear grade
2. Traction grade
3. Temperature grade

ⓘ The data shown in the illustration is sample data.

ⓘ This grading is not legally prescribed for Canada, but specified in most cases anyway.

Tread wear grade

The tread wear grade is a comparative grading based on tread wear grade tests conducted under controlled conditions on a specified U.S. Department of Transportation test track. For example, a tire graded 150 would wear one and one-half times as well on the government test track as a tire graded 100.

The relative performance of tires depends upon the actual conditions of their use, however, and may depart significantly from the norm due to variations in driving habits, service practices and differences in road characteristics and climate conditions.

Traction grade

⚠ **DANGER** Risk of accident due to inadequate traction

The traction grade assigned to this tire is based on straight-ahead braking traction tests, and does not include either acceleration, cornering, hydroplaning or peak traction characteristics.

▶ Always adapt your driving style and drive at a speed to suit the prevailing traffic and weather conditions.

! **NOTE** Damage to the drivetrain from wheelspin

▶ Avoid wheelspin.

The traction grades – from highest to lowest – are AA, A, B and C. These grades relate to the

tire's ability to come to a standstill on a wet pavement under controlled conditions on a specified U.S. government test surface made from asphalt and concrete.

Temperature grade

> ⚠ **WARNING** Risk of accident from tire overheating and tire failure
>
> The temperature grade for this tire is established for a tire that is properly inflated and not overloaded. Excessive speed, underinflation, or excessive loading, either separately or in combination, can cause excessive heat build-up and possible tire failure.
>
> ▶ Observe the recommended tire pressures and regularly check the tire pressure of all tires including the spare wheel.
>
> ▶ Adjust the tire pressure as necessary.

The temperature grades are A (highest grade), B and C. These relate to a tire's resistance to heat and its ability to release heat on a specified test wheel in laboratory tests under controlled conditions. Sustained high temperatures can cause the material of the tire to degenerate and reduce tire life. In addition, excessively high temperatures can lead to sudden tire failure. Grade C refers to a performance which all passenger vehicle tires must exhibit, according to the U.S. Department of Transportation's requirements.

Information on DOT and TIN (Tire Identification Number)

U.S. tire regulations indicate that every tire manufacturer or retreader must imprint a TIN in or on the sidewall of each tire produced.

ⓘ The data shown in the illustration is sample data.

The TIN is a unique identification number for tires and consists of the following components:

- **DOT (Department of Transportation):** tire symbol ① indicates that the tire complies with the requirements of the U.S. Department of Transportation.
- **Manufacturer identification code:** manufacturer identification code ② provides information about the tire manufacturer. New tires have a code with two symbols. Retreaded tires have a code with four symbols. For further information about retreaded tires, see (→ page 218).
- **Tire size:** identifier ③ describes the tire size.
- **Tire type code:** tire type code ④ can be used by the manufacturer as a code to describe specific characteristics of the tire.
- **Date of manufacture:** date of manufacture ⑤ provides information about the age of a tire. The 1st and 2nd numbers indicate the calendar week and the 3rd and 4th numbers indicate the year of manufacture (e.g. "3208" refers to the 32nd week of the year 2008).

Information on maximum tire load

ⓘ The data shown in the illustration is sample data.

Maximum tire load ① is the maximum permissible weight for which the tire is approved.

Do not overload the tires by exceeding the maximum permissible load. The maximum permissible load can be found on the vehicle's Tire and Loading Information placard on the B-pillar on the driver's side (→ page 210).

Information on maximum tire pressure

ⓘ The data shown in the illustration is sample data.

Maximum permitted tire pressure ①, which is permitted for the tires must not be exceeded.

Exception: when using the 225/75 R16C 121/120R (122L) tires as a spare wheel on the rear axle of Super Single vehicles with a distance limit of 62 mi (100 km) and speed limit of 34 mph (55 km/h).

Information on tire characteristics

ⓘ The data shown in the illustration is sample data.

This information describes the type of tire cord and the number of layers in sidewall ① and under tire tread ②.

Tire size designation, load-bearing capacity, speed rating and load index

⚠ **WARNING** Risk of injury through exceeding the specified tire load rating or the permissible speed rating

Exceeding the specified tire load rating or the permissible speed rating may lead to tire damage and to the tires bursting.

▶ Therefore, only use tire types and sizes approved for your vehicle model.

▶ Observe the tire load rating and speed rating required for your vehicle.

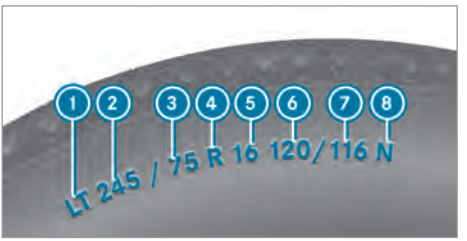

① Prefixing letter
② Nominal tire width in millimeters
③ Aspect ratio (in percent)
④ Tire code
⑤ Rim diameter
⑥ Load-bearing index
⑦ Speed rating
⑧ Load index

ⓘ The data shown in the illustration is sample data.

Further information about reading tire data can be obtained from any qualified specialist workshop.

Prefixing letter ①:

- "LT": light truck tires in accordance with US manufacturer standards.
- "C": tires for commercial usage in accordance with European manufacturer standards.

Aspect ratio (in percent) ③:
The size ratio between the tire height and tire width and is shown in percent (tire height divided by tire width).

Tire code ④ (tire type):

- "R": radial tire

Rim diameter ⑤:
The diameter of the bead seat (not the diameter of the rim flange). The rim diameter is specified in inches (in).

Load-bearing index ⑥:
Numerical code which specifies the maximum load-bearing capacity of a tire ("91" equals, e.g. 1356 lb (615 kg)).

The tire load-bearing capacity must be at least half the gross axle weight rating of the vehicle.

Do not overload the tires by exceeding the maximum permissible load.

See also:

- Maximum permissible load on the Tire and Loading Information placard (→ page 210)
- Maximum tire load (→ page 214)
- Load index

Speed rating (7):
Specifies the approved maximum speed of the tire.

ⓘ An electronic speed limiter prevents your vehicle from exceeding a speed of 130 mph (210 km/h).

Ensure that your tires have the required speed rating. You can obtain information on the required speed rating at an authorized Mercedes-Benz Center.

Summer tires

Index	Speed rating
L	Up to 75 mph (120 km/h)
M	Up to 81 mph (130 km/h)
N	Up to 87 mph (140 km/h)
P	Up to 93 mph (150 km/h)
Q	Up to 100 mph (160 km/h)
R	Up to 106 mph (170 km/h)

Summer, all-season and winter tires

Index	Speed rating
L M+S[1]	Up to 75 mph (120 km/h)
M M+S[1]	Up to 81 mph (130 km/h)
N M+S[1]	Up to 87 mph (140 km/h)
P M+S[1]	Up to 93 mph (150 km/h)
Q M+S[1]	Up to 100 mph (160 km/h)
R M+S[1]	Up to 118 mph (170 km/h)

[1]: or "M+S " for winter tires

Winter tires are marked with the snowflake symbol and fulfill the requirements of the Rubber Manufacturers Association (RMA) and the Rubber Association of Canada (RAC) regarding the tire traction on snow.

Load index (8):

- "Light load": light load tires
- "C": commercial tires

Information on definitions (tires and loading)

Tire structure and characteristics: describes the number of layers or the number of rubber-coated layers in the tire tread and the tire wall. These are made of steel, nylon, polyester and other materials.

Bar: metric unit for tire pressure.
14.5038 pounds per square inch (psi) and 100 kilopascals (kPa) are the equivalent of 1 bar.

DOT (Department of Transportation): DOT marked tires fulfill the requirements of the U.S. Department of Transportation.

Average weight of vehicle occupants: the number of occupants for which the vehicle is designed multiplied by 150 lbs (68 kg).

Uniform Tire Quality Grading Standards: a uniform standard to grade the quality of tires with regards to tread quality, tire traction and temperature characteristics. The quality grading assessment is made by the manufacturer in accordance with test specifications of the U.S. government. The quality grade of a tire is imprinted on the sidewall of the tire.

Recommended tire pressure: the recommended tire pressure is the pressure specified for the tires installed on the vehicle at the factory.

The Tire and Loading Information placard contains the recommended tire pressures for cold tires, the maximum permissible load and the maximum permissible vehicle speed.

The tire pressure table contains the recommended tire pressures for cold tires under various operating conditions, i.e. load and/or speed of the vehicle.

Increased vehicle weight due to optional equipment: the combined weight of all standard and optional equipment available for the vehicle, regardless of whether it is actually installed on the vehicle or not.

Rim: the part of the wheel on which the tire is installed.

GAWR (Gross Axle Weight Rating): GAWR is the gross axle weight rating. The actual load on an axle must never exceed the Gross Axle Weight

Rating. You can find the Gross Axle Weight Rating on the B-pillar on the driver's side.

Speed rating: the speed rating is part of the tire identification. It specifies the speed range for which a tire is approved.

GVW (Gross Vehicle Weight): the Gross Vehicle Weight includes the weight of the vehicle including fuel, tools, the spare wheel, accessories installed, occupants, luggage and the trailer drawbar noseweight if applicable. The Gross Vehicle Weight must never exceed the Gross Vehicle Weight Rating (GVWR) specified on the B-pillar on the driver's side.

GVWR (Gross Vehicle Weight Rating): the GVWR is the maximum permitted gross weight of the fully laden vehicle (weight of the vehicle including all accessories, occupants, fuel, luggage and the trailer drawbar noseweight if applicable). The Gross Vehicle Weight Rating is specified on the vehicle identification plate on the B-pillar on the driver's side.

Maximum weight of the laden vehicle: the maximum weight is the sum of the vehicle's curb weight, weight of the accessories, maximum load and the weight of the factory installed optional equipment.

Kilopascal (kPa): metric unit for tire pressure. 6.9 kPa are the equivalent of 1 psi. Another unit for tire pressure is bar. 100 kilopascals (kPa) are the equivalent of 1 bar.

Load index: in addition to the load-bearing index, the load index may also be imprinted on the sidewall of the tire. This specifies the load-bearing capacity more precisely.

Curb weight: the weight of a vehicle with standard equipment including the maximum capacity of fuel, oil and coolant. It also includes the air-conditioning system and optional equipment if these are installed on the vehicle, but does not include passengers or luggage.

Maximum tire load: the maximum tire load is the maximum permissible weight in kilograms or lbs for which a tire is approved.

Maximum permissible tire pressure: maximum permissible tire pressure for one tire.

Maximum load on one tire: maximum load on one tire. This is calculated by dividing the maximum axle load for one axle by two.

PSI (pounds per square inch): standard unit of measurement for tire pressure.

Aspect ratio: relationship between tire height and tire width in percent.

Tire pressure: pressure inside the tire applying an outward force to every square inch of the tire's surface. The tire pressure is specified in pounds per square inch (psi), in kilopascal (kPa) or in bar. The tire pressure should only be corrected when the tires are cold.

Tire pressure on cold tires: the tires are cold when the vehicle has been parked with the tires out of direct sunlight for at least three hours and the vehicle has been driven less than 1 mile (1.6 km).

Tire contact surface: the part of the tire that comes into contact with the road.

Tire bead: the purpose of the tire bead is to ensure that the tire sits securely on the wheel rim. There are several wire cores in the tire bead to prevent the tire from changing length on the wheel rim.

Side wall: the part of the tire between the tread and the tire bead.

Special equipment weight: the combined weight of those optional extras that weigh more than the replaced standard parts and more than 5 lbs (2.3 kg). These optional extras, such as high-performance brakes, level control system, a roof luggage rack or a high-performance battery, are not included in the curb weight and the weight of the accessories.

TIN (Tire Identification Number): a unique identification number which can be used by a tire manufacturer to identify tires, for example for a product recall, and thus identify the purchasers. The TIN is made up of the manufacturer identification code, tire size, tire type code and the manufacturing date.

Load-bearing index: the load-bearing index (also load index) is a code that contains the maximum load-bearing capacity of a tire.

Traction: traction is the result of friction between the tires and the road surface.

Wear indicator: narrow bars (tread wear bars) that are distributed over the tire tread. If the tire tread is level with the bars, the wear limit of 1/16 in (1.6 mm) has been reached.

Distribution of vehicle occupants: distribution of vehicle occupants over designated seat positions in a vehicle.

Maximum permissible payload weight: nominal load and luggage load plus 150 lbs (68 kg) multiplied by the number of seats in the vehicle.

Changing a wheel

Notes on selecting, installing and replacing tires

You can ask for information regarding permitted wheel/tire combinations at a qualified specialist workshop.

WARNING Risk of accident due to incorrect sizes of wheels and tires

If wheels and tires of the wrong size are used, the wheel brakes or wheel suspension components may be damaged.

▶ Always replace wheels and tires with ones that fulfill the specifications of the original part.

For wheels, pay attention to the following:

- Designation
- Type
- Permissible wheel load
- Wheel offset

For tires, pay attention to the following:

- Designation
- Manufacturer
- Type
- Load-bearing index
- Speed rating

WARNING Risk of injury through exceeding the specified tire load rating or the permissible speed rating

Exceeding the specified tire load rating or the permissible speed rating may lead to tire damage and to the tires bursting.

▶ Therefore, only use tire types and sizes approved for your vehicle model.

▶ Observe the tire load rating and speed rating required for your vehicle.

NOTE Vehicle and tire damage through tire types and sizes that have not been approved

For safety reasons, only use tires, wheels and accessories which have been specially approved by Mercedes-Benz for your vehicle.

These tires have been specially adapted for use with the control systems, such as ABS or ESP®.

Otherwise, certain properties, such as handling characteristics, vehicle noise and consumption could be adversely affected. Furthermore, other tire size could result in the tires rubbing against the body and axle components when loaded. This could result in damage to the tire or the vehicle.

▶ Only use tires, wheels and accessories that have been checked and recommended by Mercedes-Benz.

NOTE Driving safety put at risk by retreaded tires

Retreaded tires are not checked or recommended by Mercedes-Benz, as previous damage is not always detected during the retread process.

Driving safety cannot, therefore, be guaranteed.

▶ Do not use used tires when their previous usage is unknown.

NOTE Damage to electronic component parts through the use of tire-installing tools

Vehicles with a tire pressure monitoring system: there are electronic component parts in the wheel. Tire-installing tools should not be applied in the area of the valve.

Otherwise, the electronic component parts could be damaged.

▶ Always have tires changed at a qualified specialist workshop.

Accessories that are not approved for your vehicle by Mercedes-Benz, or are not being used correctly, can impair operating safety.

Before purchasing and using non-approved accessories, visit a qualified specialist workshop and inquire about:

- Suitability
- Legal stipulations
- Factory recommendations

Observe the following points when selecting, installing and replacing tires:

- Use only tires and wheels of the same type, design (winter tires, all-season tire) and make.
- Only install wheels of the same size and tread design on one axle (left and right).

  It is only permissible to install a different wheel size to this in the event of a flat tire in order to drive to the specialist workshop.
- Only install tires of the correct size onto the wheels.
- **Vehicles with a tire pressure monitoring system:** all installed wheels must be equipped with functioning sensors for the tire pressure monitoring system.
- At temperatures below 50 °F (10 °C), use winter tires or all-season tire marked M+S for all wheels.

  Winter tires bearing the snowflake symbol in addition to the M+S marking provide the best possible grip in wintry road conditions.
- Only use tires with the same tread.
- Observe the maximum permissible speed for the installed tires.

  If this is below the vehicle's maximum speed, this must be indicated in an appropriate label in the driver's field of vision.
- Break in new tires at moderate speeds for the first 60 miles (100 km).
- Replace the tires after six years at the latest, regardless of wear.

For more information on wheels and tires, contact a qualified specialist workshop.

ⓘ **Vehicles with twin tires:**
For vehicles with twin tires with a GVW of 11,030 lbs or 12,125 lbs, only use tires with the dimension LT 215/85 R16 which have been approved for this vehicle by the manufacturer. It is not permissible to use tires with different dimensions; doing so may lead to a general operating permit being rendered invalid.

ⓘ **Vehicles with single tires:**
For vehicles with single tires with a GVW less than or equal to 9480 lbs, only use tires with the dimension LT 245/75 R16 which have been approved for this vehicle by the manufacturer. It is not permissible to use tires with different dimensions; doing so may lead to a general operating permit being rendered invalid.

ⓘ **Vehicles with Super Single tires:**
For vehicles with single tires with a GVW of 11,030 lbs, only use tires with the dimensions 225/75 R16C (FA) and 285/65 R16C (RA) which have been approved for this vehicle by the manufacturer. It is not permissible to use tires with different dimensions; doing so may lead to a general operating permit being rendered invalid.

Be sure to also observe the following further related subjects:

- Notes on tire pressure (→ page 204)
- Tire and Loading Information placard (→ page 210)
- Tire size designation, load-bearing capacity, speed rating and load index (→ page 215)
- Tire pressure table
- Notes on the emergency spare wheel (→ page 225)

Notes on rotating wheels

⚠ **WARNING** Risk of injury through different wheel sizes

Interchanging the front and rear wheels if the wheels or tires have different dimensions may severely impair the driving characteristics.

The wheel brakes or wheel suspension components may also be damaged.

▶ Rotate front and rear wheels only if the wheels and tires are of the same dimensions.

On vehicles that have the same size front and rear wheels, rotate the wheels according to the intervals in the tire manufacturer's warranty book in your vehicle documents. If this is not available, rotate the tires every 3,000 (5,000) to 6,000 miles (10,000 km), depending on the

degree of wear. Ensure that the direction of rotation is maintained.

It is imperative to observe the instructions and safety notes on "Changing a wheel" when doing so.

Wheel size categories of wheels

The determined vehicle speed is displayed in the instrument cluster and is important for controlling the driving safety systems and driving systems. The display accuracy of the speedometer and the odometer is legally prescribed. Determining the speed is dependent on the tire size or the rolling circumference of the tires. The rim diameter is always specified in inches.

For this reason, the vehicle control units can be coded for the following three wheel size categories:

Wheel size category 1

- 195/75 R16C
- 205/75 R16C
- 225/65 R16C
- 235/65 R16C
- 235/60 R17C

Wheel size category 2

- 225/75 R16C

Wheel size category 3

- 225/75 R16C FA
- 285/65 R16C RA

ⓘ Mercedes-Benz recommends that you stay within a wheel size category when changing a tire. In this way, you avoid recoding the control units.

If you change the wheel size of your vehicle, for instance when changing wheels for winter operation, check it is assigned to the correct wheel size category. If the wheel size category changes, you must have your vehicle's control units recoded at a qualified specialist workshop.

Otherwise, the display accuracy of the speedometer and the odometer will be outside the legally prescribed tolerance. It may also be lower, i.e. the current road speed is then higher than the speed shown on the speedometer. If a deviation is outside the range of tolerance, driving safety systems and driving systems may be operationally impaired or may detect a malfunction and switch themselves off.

Information on the direction of the tires' rotation

Tires with a specified direction of rotation have additional benefits, e.g. if there is a risk of hydroplaning. You will only gain these benefits if the correct direction of rotation is observed.

An arrow on the sidewall of the tire indicates its correct direction of rotation.

You may also install a spare wheel against the direction of rotation. Observe the time restriction on use as well as the speed limitation specified on the spare wheel.

Information on storing wheels

Observe the following when storing wheels:

- Wheels that have been removed should be stored in a cool, dry and, if possible, dark place.
- Protect the tires from oil, grease and fuel.

Overview of the tire-change tool kit

Necessary tire-change tools may include, for example:

- Jack
- Wheel wrench

Vehicles with rear wheel drive

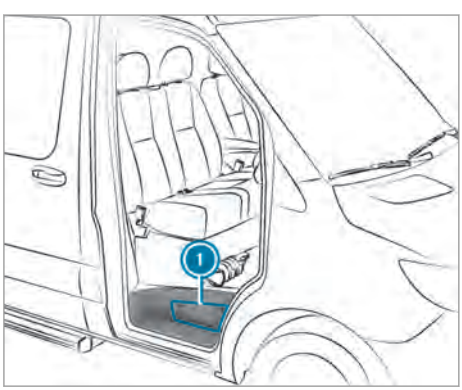

The tire-change tool kit is located in stowage compartment ① above the step of the do-driver's door and in the stowage compartment in the footwell on the front-passenger side.

Preparing the vehicle for a wheel change

Requirements:

- The tire-change tool kit is available.
- The vehicle is not on a slope.
- The vehicle is on solid, non-slippery and level ground.

▶ Apply the parking brake.

▶ Move the front wheels to the straight-ahead position.

▶ **Vehicles with automatic transmission:** shift the transmission to position P.

▶ Switch off the engine.

▶ Make sure that the engine cannot be started.

▶ Take the vehicle tool kit from the footwell on the front passsenger side (→ page 200).

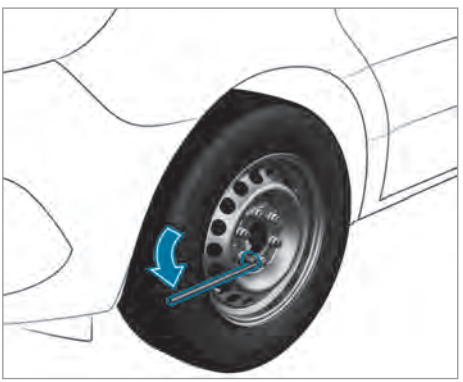

Vehicles with rear wheel drive

▶ Take the jack and the tire-change tool kit out of the stowage compartment (→ page 220).

▶ If necessary, remove the hub cab.

▶ Assemble the lug wrench extension using the middle rod and the rod with the largest diameter from the three-piece jack pump lever.

▶ Starting with the middle rod, slide the lug wrench extension as far as it will go onto the lug wrench.

▶ Using the lug wrench, loosen the wheel nuts or bolts on the wheel you wish to change by about one full turn. Do not unscrew the wheel nuts or bolts completely.

▶ Raise the vehicle (→ page 221).

Raising the vehicle when changing a wheel

⚠ **WARNING** Risk of injury from jack tipping

If you park a vehicle with air suspension, the air suspension may remain activated for up to one hour, even when the ignition is switched off. If you then raise the vehicle with the jack, the air suspension will attempt to adjust the vehicle level.

The jack may tip.

▶ Press the Service button on the air suspension remote control before raising the vehicle.
This prevents automatic readjustment of the vehicle level and prevents it from being raised or lowered manually.

⚠ **WARNING** Risk of injury from incorrect positioning of the jack

If you do not position the jack correctly at the appropriate jacking point of the vehicle, the jack could tip with the vehicle raised.

▶ Only position the jack at the appropriate jacking point of the vehicle. The base of the jack must be positioned vertically under the jacking point of the vehicle.

⚠ **WARNING** Risk of injury from vehicle tipping

On slopes, the jack could tip with the vehicle raised.

▶ Never change a wheel on a slope.

▶ Consult a qualified specialist workshop.

! **NOTE** Vehicle damage from the jack

If you do not position the jack correctly at the appropriate jack support point of the vehicle, the jack could tip over with the vehicle raised.

▶ The jack is designed exclusively for jacking up the vehicle at the jack support points.

Requirements:

- There are no persons in the vehicle.
- The vehicle is prepared for changing a wheel (→ page 221).

Only position the jack on the jack support points intended for this purpose. You could otherwise damage the vehicle.

Important notes on using the jack:

- Only use the vehicle-specific jack that has been tested and approved by Mercedes-Benz to raise the vehicle. If the jack is used incorrectly, it could tip over while the vehicle is raised.
- The jack is designed only to raise the vehicle for a short time while a wheel is being changed and is not suitable for carrying out maintenance work under the vehicle.
- Avoid changing a wheel on uphill and downhill slopes.
- The jack must be placed on a firm, flat and non-slip surface. If necessary, use a large, flat, load bearing and non-slip underlay.
- The base of the jack is positioned vertically under the jack support point.

Safety instructions while the vehicle is raised:

- Do not put your hands or feet under the vehicle.
- Do not lie underneath the vehicle.
- Do not start the engine and do not release the parking brake.
- Do not open or close any doors.

Vehicles with rear wheel drive

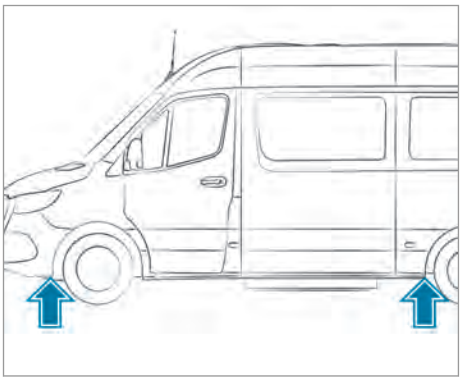

Jack support points

Only use the middle rod and the pump lever rod with the largest diameter for the jack as a lug wrench extension. Only insert the middle rod on the lug wrench, and always as far as it will go. Otherwise, the rods could bend and deform so much that they can no longer be used as pump levers for the jack.

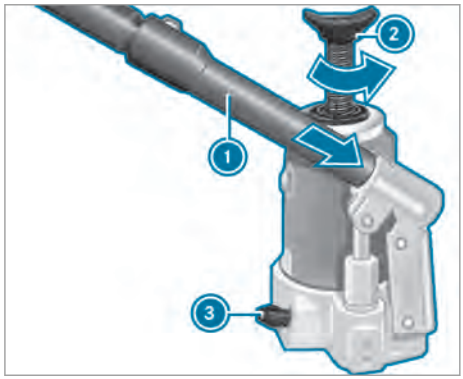

▶ **To prepare the hydraulic jack:** insert the third rod of pump lever ① for the jack into the lug wrench extension.

▶ Close pressure release screw ③.

▶ To do this, use the flattened section on pump lever ① to turn pressure release screw ③ clockwise to the stop.

ⓘ Do not turn pressure release screw ③ more than one or two full turns. Hydraulic fluid could otherwise escape.

▶ Insert pump lever ① with the largest rod into the recess on the jack and secure by turning it clockwise.

▶ Place the jack vertically beneath the jack support points described below.

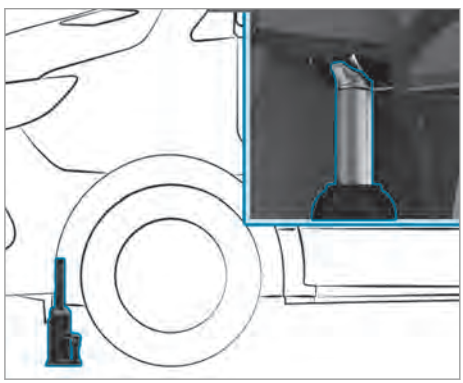

Jack support point, front axle

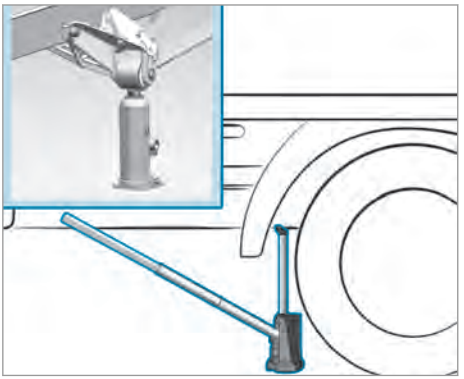

Jack support point, rear axle (example: chassis up to 3.5 t)

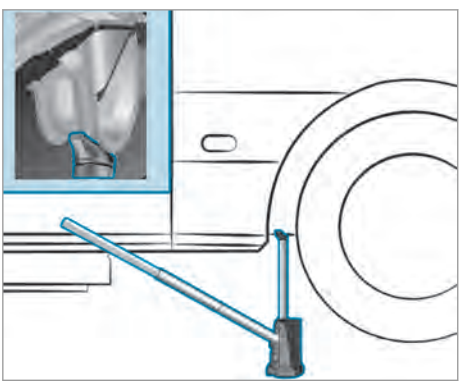

Jack support point, rear axle (example: Cargo Van and Passenger Van up to 4.0 t)

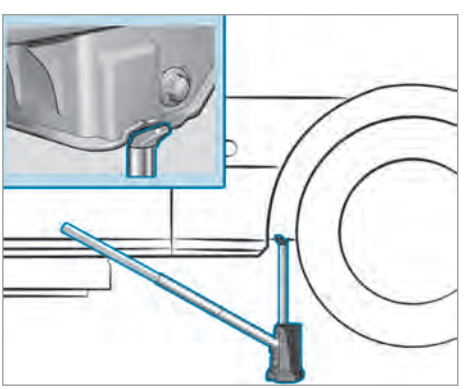

Jack support point, rear axle (vehicles 5.0 t)

- Place the jack beneath the jack support point.
- **Vehicles with all-wheel drive:** turn jack spindle ② counter-clockwise as far as it will go.
- Raise the vehicle until the tire is raised a maximum of 1.2 in (3 cm) off the ground.
- Loosen and remove the wheel (→ page 223).

Removing a wheel

Requirements:

- The vehicle is raised (→ page 221).

  When changing a wheel, avoid applying any force to the brake discs since this could impair the level of comfort when braking.

NOTE Damage to threading from dirt on wheel bolts

- Do not place wheel bolts in sand or on a dirty surface.

- Unscrew the wheel bolts or nuts with the wheel nut wrench.
- On front wheels with wheel nuts, remove the wheel nut cover.
- Remove the wheel.

Installing a new wheel

Requirements:

- The wheel is removed (→ page 223).

WARNING Risk of accident from losing a wheel

Oiled, greased or damaged wheel bolt/wheel nut threads or wheel hub/wheel mounting bolt threads can cause the wheel bolts/wheel nuts to come loose.

As a result, you could lose a wheel while driving.

- Never oil or grease the threads.
- In the event of damage to the threads, contact a qualified specialist workshop immediately.
- Have the damaged wheel bolts or damaged hub threads replaced.
- Do not continue driving.

WARNING Risk of injury from tightening wheel bolts and nuts

If you tighten the wheel bolts or wheel nuts when the vehicle is raised, the jack could tip.

- Only tighten wheel bolts or wheel nuts when the vehicle is on the ground.

- Observe the information on the choice of tires (→ page 218).
- For safety reasons, only use wheel bolts or wheel nuts which have been approved by Mercedes-Benz and for the wheel in question.

When you install the steel spare wheel, it is essential you use short wheel bolts for a steel wheel. Using other wheel bolts when installing the steel spare wheel may lead to damage to the brake system.

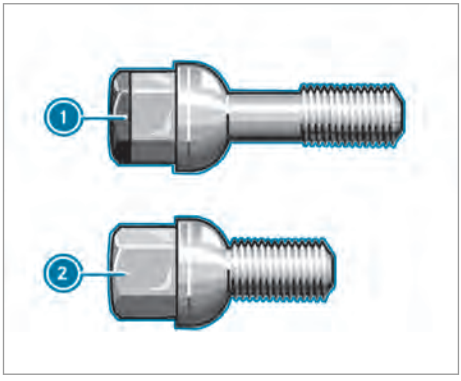

1. Wheel bolt for alloy wheels
2. Wheel bolt for steel wheel

- Clean the wheel and wheel hub contact surfaces.
- **Vehicles with Super Single tires:** first install the adapter for the narrow spare wheel on the wheel hub.
- Slide the new wheel which is to be installed onto the wheel hub or the adapter for the spare wheel and push it on.
- Slide the new wheel which is to be installed onto the wheel hub and push it on.

Wheels centered using the wheel bolts:

- Vehicles with alloy wheels: use the short wheel bolts for the steel spare wheel from the vehicle tool kit.
- Screw in the wheel bolts until they are finger-tight.

Wheels with wheel nuts:

- Front wheels with wheel nut cover: press the wheel nut cover onto the wheel nuts.
- Screw in three wheel nuts over the fixing discs of the wheel nut cover.
- Turn the wheel so that the wheel bolts are in the middle of the holes.
- Screw in the remaining wheel nuts.
- Slightly tighten all the wheel nuts.

Lowering the vehicle after a wheel change

WARNING Risk of injury through incorrect tightening torque

The wheels could come loose if the wheel bolts or wheel nuts are not tightened to the prescribed tightening torque.

- Make sure the wheel bolts or wheel nuts are tightened to the prescribed tightening torque.
- If you are not sure, do not move the vehicle. Consult a qualified specialist workshop and have the tightening torque checked immediately.

Requirements:

- The new wheel has been installed (→ page 223).

Observe the notes on raising the vehicle (→ page 221).

Vehicles with rear wheel drive

Only use the middle rod and the pump lever rod with the largest diameter for the jack as a lug wrench extension. Only insert the middle rod on the lug wrench, and always as far as it will go. Otherwise, the rods could bend and deform so much that they can no longer be used as pump levers for the jack.

Vehicles with Super Single tires: if you mount the spare wheel to the rear axle, do not exceed the maximum speed of 34 mph (55 km/h) and the maximum distance of 62 miles (100 km). Otherwise, the transmission could be damaged due to the different rotational speeds of the wheels.

- Using the pump lever, slowly turn the drain screw on the jack approximately one revolution and carefully lower the vehicle.

- Place the jack to one side.
- Pull the rod with the smallest diameter off the pump lever.
  The shortened pump lever serves as a lug wrench extension.
- Starting with the middle rod, slide the lug wrench extension as far as it will go onto the lug wrench.

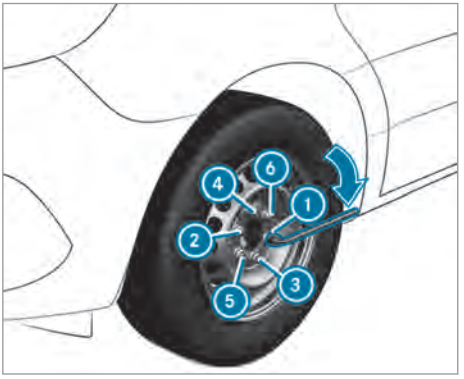

- Tighten the wheel bolts or nuts evenly in the sequence indicated (1 to 6).

  Specified tightening torque:
  - Steel wheel bolts: 177 lb-ft (240 Nm)
  - Wheel nuts: 133 lb-ft (180 Nm)
  - Alloy wheel bolts: 133 lb-ft (180 Nm)
- Push the piston on the hydraulic jack in again and close the pressure release screw.
- **Vehicles with all-wheel drive:** turn the jack spindle clockwise as far as it will go.

ⓘ You can now install the hub caps on steel wheels with wheel bolts. The installation procedure depends on whether the hub cap acts as a trim that covers the whole wheel, or just covers the center.

- Wheel with hub cap: position the opening for the tire valve in the hub cap over the tire valve.
- Push the edge of the hub cap onto the wheel rim with both hands until it engages into place. Make sure the hub cap retaining catches engage on the steel wheel.
- **Wheel with central hub cap:** position the retaining lugs of the central hub cap over the wheel bolts.
- Hit the middle of the hub cap to engage it on the wheel.
- Secure the faulty wheel in the spare wheel bracket.
- **Vehicles with Super Single tires:** transport the defective rear wheel in the load area. The rear wheel is too large for the spare wheel bracket.
- Check the tire pressure of the newly installed wheel and adjust it if necessary.
- Retighten the wheel bolts or wheel nuts to the specified tightening torque after the vehicle has been driven 31 miles (50 km).
- When using a wheel or spare wheel with a new or newly painted wheel rim, have the wheel bolts or nuts retightened after approximately 620 miles (1,000 km) to 3,100 miles (5,000 km).

ⓘ **Vehicles with the tire pressure monitor system:** all installed wheels must be equipped with functioning sensors.

Make sure to observe the following further related subject:

- Notes on tire pressure (→ page 204)

Spare wheel

Notes on the spare wheel

⚠ **WARNING** Risk of accident caused by incorrect wheel and tire dimensions

Wheel and tire dimensions as well as the type of tire may vary between the spare wheel and the wheel to be replaced. When the spare wheel is installed, driving characteristics may be severely affected.

To prevent hazardous situations:

- Adapt your driving style accordingly and drive carefully.
- Never install more than one spare wheel that differs from the wheel to be replaced.
- Only use the spare wheel that differs from the wheel to be replaced for a short time.
- Do not switch off ESP®.
- Have the spare wheel of a different size replaced at the nearest qualified specialist workshop. The wheel and tire

must have the correct dimensions and the tire must be the correct type.

Do not exceed a maximum speed of 50 mph (80 km/h) if a spare wheel of a different size is installed.

WARNING Risk of accident from damaged spare wheel with Super Single tires

Vehicles with Super Single tires

The tire of the spare wheel exposed to above-average loads after being installed on the rear axle. If you exceed the maximum speed or the maximum distance, or install the spare wheel again, the tire of the spare wheel may be damaged. The tire damage may not be visible and not detectable.

A damaged tire may cause a loss of tire pressure. This could cause you to lose control of the vehicle.

- Only use the spare wheel if it has not yet been installed on the rear axle with the current tires.
- If the spare wheel had been installed on the rear axle, have the tire of the spare wheel replaced after changing the wheel again, irrespective of the distance.
- For safety reasons, when changing a tire ensure that only the tire valve type approved for the tires is used.

NOTE Damage to the transmission

Vehicles with Super Single tires: when you install the spare wheel on the rear axle, the transmission may be damaged by the different rotational speeds of the wheels.

- When the spare wheel is installed on the rear axle, observe the maximum speed of 34 mph (55 km/h) and the maximum driving distance of 62 miles (100 km).

ⓘ The spare wheel can be used without restrictions on the front axle of a vehicle with Super Single tires.

Regularly check that the spare wheel is secured and has the specified tire pressure (→ page 204).

Regularly check the following, particularly prior to long trips:

- the tire pressure of the spare wheel (if necessary, adjust the tire pressure).
- the fastenings of the spare wheel bracket.

Replace the tires after six years at the latest, regardless of wear. This also applies to the spare wheel.

ⓘ If you have installed a spare wheel, the tire pressure monitoring system will not function for this wheel. The spare wheel is not equipped with a sensor for the tire pressure monitoring system.

Installing/removing the spare wheel

Vehicles with rear wheel drive: removing the spare wheel (Cargo Van/Passenger Van)

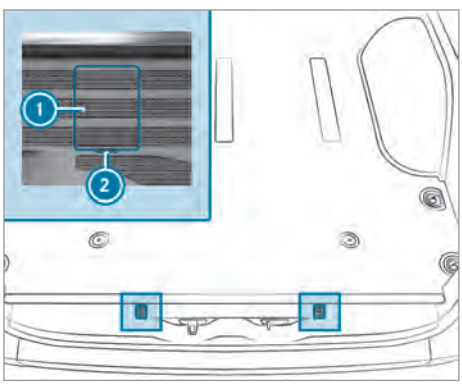

Bolt covers for the safety hooks (example: Cargo Van)

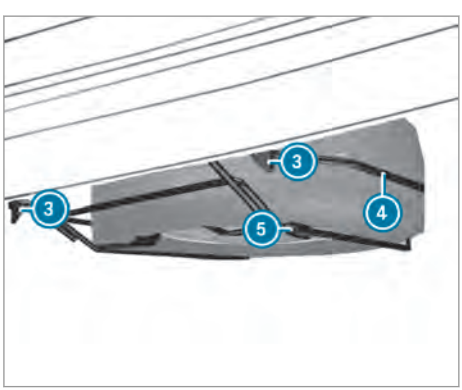

- Open the rear-end doors.

- Place a screwdriver into recesses ② and then pry off covers ①.
- Using the lug wrench from the vehicle tool kit, unscrew the now visible bolts counter-clockwise by approximately 20 turns.
- Slightly raise spare wheel carrier ④ and unhook left-hand safety hook ③.
- Assemble the pump lever for the jack and slide it into sleeve ⑤ on the right-hand side of spare wheel carrier ④.
- Raise spare wheel carrier ④ with the pump lever and unhook right-hand safety hook ③.
- Slowly lower spare wheel carrier ④ to the ground.
- Lift spare wheel carrier ④ slightly and pull the pump lever out of the sleeve.
- Use the pump lever to lift the spare wheel beyond the rear edge of spare wheel carrier ④.
- Carefully remove the spare wheel from spare wheel carrier ④. The spare wheel is heavy. When the spare wheel is removed, the center of gravity changes due to the heavy weight of the wheel. The spare wheel may slip down or tip over.

Vehicles with rear wheel drive: installing the spare wheel (Cargo Van/Passenger Van)

- Carefully place the spare wheel onto spare wheel carrier ④. The spare wheel is heavy. When you place the spare wheel onto spare wheel carrier ④, the center of gravity changes due to the weight of the wheel. The spare wheel may slip down or tip over.
- Slide the pump lever for the jack into sleeve ⑤ on spare wheel carrier ④.
- Raise spare wheel carrier ④ with the pump lever and attach right-hand safety hook ③.
- Slightly raise spare wheel carrier ④ and attach left-hand safety hook ③.
- Pull the pump lever out of sleeve ⑤.
- Using the lug wrench, tighten safety hook bolts ③ by turning them clockwise.
- Replace and engage covers ①.
- Close the rear-end doors.

Vehicles with rear wheel drive: removing the spare wheel (vehicle with lowered chassis)

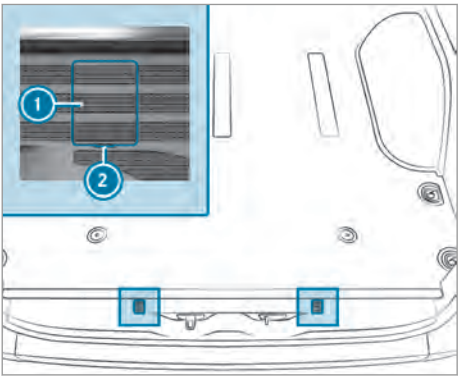

Bolt covers for the safety hooks (example: Cargo Van)

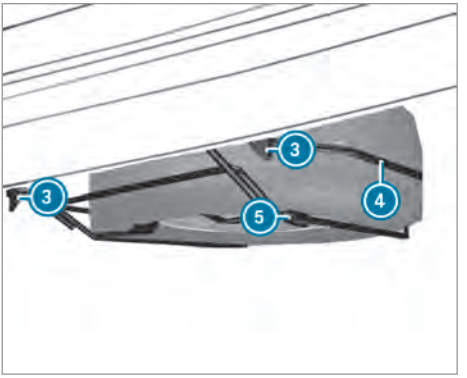

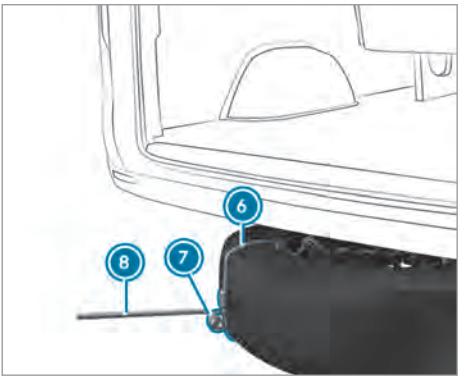

- Open the rear-end doors.

- Place a screwdriver into recesses ② and then pry off covers ①.
- Using the lug wrench from the vehicle tool kit, unscrew the now visible bolts counter-clockwise by approximately 20 turns.
- Slightly raise spare wheel carrier ④ and unhook left-hand safety hook ③.
- Assemble the pump lever for the jack and slide it into sleeve ⑤ on the right-hand side of spare wheel carrier ④.
- Raise the spare wheel carrier with the pump lever and unhook right-hand safety hook ③.
- Position loop ⑦ of extraction device ⑥ on the spare wheel so that you will later be able to attach lug wrench ⑧.
- Prepare the jack.
- Place the jack beneath the corresponding jack support point.
- Move the pump lever up and down until the tire is raised a maximum of 1.18 in (3 cm) off the ground.
- Hook lug wrench ⑧ into loop ⑦ of extraction device ⑥ on the spare wheel.
- Carefully remove the spare wheel from spare wheel carrier ④. The spare wheel is heavy. When the spare wheel is removed, the center of gravity changes due to the heavy weight of the wheel. The spare wheel may slip down or tip over.
- Remove the spare wheel extraction device and store it in a safe place. You can now install the spare wheel to your vehicle.
- Lower the vehicle.

Vehicles with rear wheel drive: installing the spare wheel (vehicle with lowered chassis)

ⓘ In the event of a flat tire, you may store the defective wheel inside the vehicle only. An intact wheel may be stored in the spare wheel carrier only when the vehicle is unladen. A laden vehicle must first be raised.

- Carefully place the spare wheel onto spare wheel carrier ④. The spare wheel is heavy. When you place the spare wheel onto spare wheel carrier ④, the center of gravity changes due to the weight of the wheel. The spare wheel may slip down or tip over.
- Slide the pump lever for the jack into sleeve ⑤ on spare wheel carrier ④.
- Raise spare wheel carrier ④ with the pump lever and attach right-hand safety hook ③.
- Slightly raise spare wheel carrier ④ and attach left-hand safety hook ③.
- Pull the pump lever out of sleeve ⑤.
- Using the lug wrench, tighten safety hook bolts ③ by turning them clockwise.
- Replace and engage covers ①.
- Close the rear-end doors.

Vehicles with rear wheel drive: removing the spare wheel (chassis)

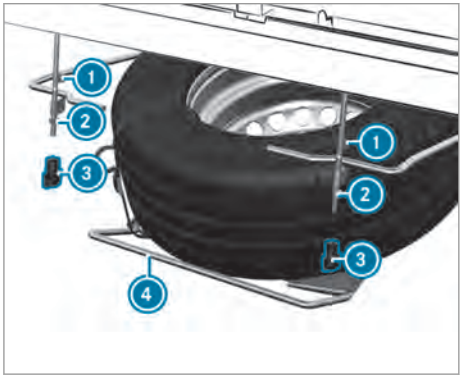

- Loosen wing nuts ③ manually and then remove them.
- Loosen nuts ② as far as the thread end.
- Slightly raise spare wheel carrier ④ and unhook left-hand safety hook ①.
- Assemble the pump lever for the jack and slide it into the sleeve on the right-hand side of spare wheel carrier ④.
- Raise spare wheel carrier ④ with the pump lever and unhook right-hand safety hook ①.
- Slowly lower spare wheel carrier ④ to the ground.
- Lift spare wheel carrier ④ slightly and pull the pump lever out of the sleeve.
- Use the pump lever to lift the spare wheel beyond the rear edge of the spare wheel carrier.
- Carefully remove the spare wheel from the spare wheel carrier. The spare wheel is heavy. When the spare wheel is removed, the center of gravity changes due to the heavy weight of the wheel. The spare wheel may slip down or tip over.

Vehicles with rear wheel drive: installing the spare wheel (chassis)

- Carefully place the spare wheel onto spare wheel carrier ④. The spare wheel is heavy. When you place the spare wheel onto the spare wheel carrier, the center of gravity changes due to the weight of the wheel. The spare wheel may slip down or tip over.
- Slide the pump lever for the jack into the sleeve on spare wheel carrier ④.
- Raise spare wheel carrier ④ with the pump lever and attach right-hand safety hook ①.
- Slightly raise the spare wheel carrier and attach left-hand safety hook ①.
- Pull the pump lever out of the sleeve.
- Tighten nuts ②.
- Put wing nuts ③ in place and tighten them.

Information on technical data

The given data only applies to vehicles with standard equipment. Further information can be obtained at a qualified specialist workshop.

On-board electronics

Notes on work on the engine electronics

NOTES Premature wear through improper maintenance

Improper maintenance may cause vehicle components to wear more quickly and the vehicle's operating permit may be invalidated.

▶ Always have work on the engine electronics and related components carried out at a qualified specialist workshop.

Two-way radios

Installation notes for two-way radios

WARNING Risk of accident due to improper work on two-way radios

The electromagnetic radiation from two-way radios can interfere with the on-board electronics if RF transmitters are manipulated or retrofitted incorrectly.

This could jeopardize the operating safety of the vehicle.

▶ You should have all work on electrical and electronic components carried out at a qualified specialist workshop.

WARNING Risk of accident from incorrect operation of two-way radios

If you operate two-way radios incorrectly in the vehicle, the electromagnetic radiation could interfere with the on-board electronics, e.g.:

- if the two-way radio is not connected to an exterior antenna
- if the exterior antenna is not correctly mounted or is not of low reflection

This could jeopardies the operating safety of the vehicle.

▶ Have the low-reflection exterior antenna installed at a qualified specialist workshop.

▶ When operating two-way radios in the vehicle, always connect them to the low-reflection exterior antenna.

NOTE Invalidation of the operating permit due to failure to comply with the instructions for installation and use

The operating permit may be invalidated if the instructions for installation and use of two-way radios are not observed.

▶ Only use approved frequency bands.

▶ Observe the maximum permissible output power in these frequency bands.

▶ Only use approved antenna positions.

Use Technical Specification ISO/TS 21609 (Road Vehicles - EMC guidelines for installation of aftermarket radio frequency transmitting equipment) when retrofitting two-way radios. Comply with the legal requirements for detachable parts.

If your vehicle has installing for two-way radio equipment, use the power supply or antenna connections intended for use with the installing. Observe the manufacturer's supplement during installation.

Information on two-way radio transmission output

The maximum transmission outputs (PEAK) at the base of the antenna must not exceed the values in the following table:

Frequency band and maximum transmission output

Frequency band	Maximum transmission output
Short wave 3 – 54 MHz	100 W
4 – m – waveband 74 – 88 MHz	30 W
2 – m – waveband 144 – 174 MHz	50 W
Trunked radio system/Tetra 380 – 460 MHz	10 W

Frequency band	Maximum transmission output
70 – cm – waveband 420 – 450 MHz	35 W
Two-way radio (2G/3G/4G)	10 W

The following can be used in the vehicle without restrictions:

- two-way radios with a maximum transmission output of up to 100 mW
- two-way radios with transmitter frequencies in the 380 – 410 MHz frequency band and a maximum transmission output of up to 2 W (trunked radio system/Tetra)
- mobile phones (2G/3G/4G)

There are no restrictions when positioning the antenna on the outside of the vehicle for the following frequency bands:

- Trunked radio system/Tetra
- 70 – cm – waveband
- 2G/3G/4G

Vehicle identification plate, vehicle identification number (VIN) and engine number

Vehicle identification plate

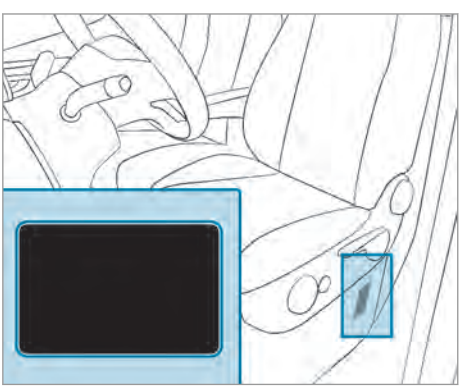

Depending on the vehicle model, the vehicle identification plate is located on the seat base of the driver's seat or on the B-pillar.

ⓘ The data is vehicle-specific and can differ from that shown. Always observe the specifications on your vehicle's identification plate.

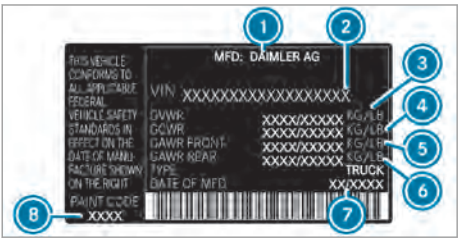

Vehicle identification plate (example: USA, complete vehicles)

1. Vehicle manufacturer
2. VIN (vehicle identification number)
3. Permissible gross mass
4. Permissible gross mass of vehicle combination
5. Permissible front axle load
6. Permissible rear axle load
7. Date of manufacture
8. Paint code

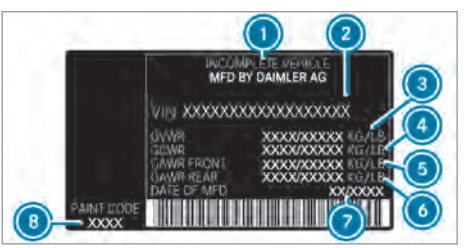

Vehicle identification plate (example: USA, incomplete vehicles)

1. Vehicle manufacturer
2. VIN (vehicle identification number)
3. Permissible gross mass
4. Permissible gross mass of vehicle combination
5. Permissible front axle load
6. Permissible rear axle load
7. Date of manufacture
8. Paint code

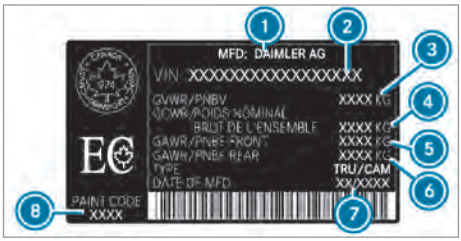

Vehicle identification plate (example: Canada, complete vehicles)

1. Vehicle manufacturer
2. VIN (vehicle identification number)
3. Permissible gross mass
4. Permissible gross mass of vehicle combination
5. Permissible front axle load
6. Permissible rear axle load
7. Date of manufacture
8. Paint code

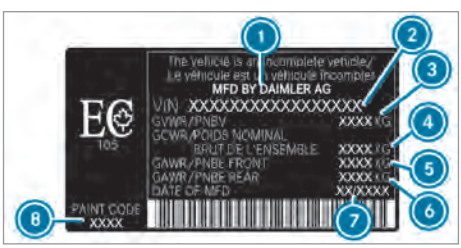

Vehicle identification plate (example: Canada, incomplete vehicles)

1. Vehicle manufacturer
2. VIN (vehicle identification number)
3. Permissible gross mass
4. Permissible gross mass of vehicle combination
5. Permissible front axle load
6. Permissible rear axle load
7. Date of manufacture
8. Paint code

The maximum permissible gross vehicle weight is made up of the vehicle weight, all vehicle occupants, the fuel and the load. The maximum gross axle weight rating is the maximum weight that can be carried by one axle (front or rear axle).

Never exceed the maximum permissible gross vehicle weight or the maximum gross axle weight rating for the front or rear axle.

Vehicle identification plate may also contain the following data:

- payload
- curb weight
- number of passenger seats

VIN engraved underneath the hood

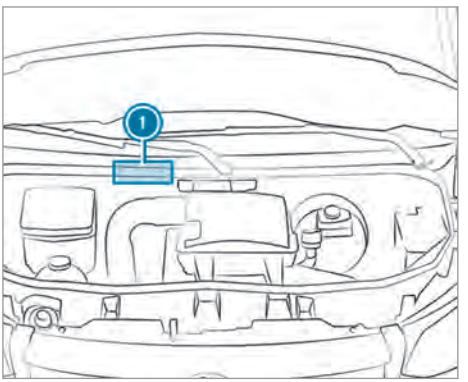

Engraved VIN 1 is located underneath the hood.

VIN underneath the windshield

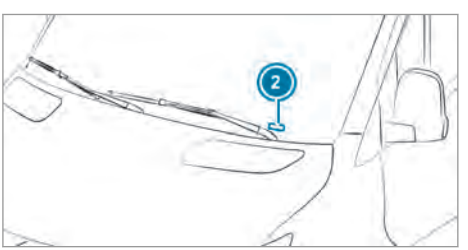

The VIN is also attached as a label on the lower section of windshield 2.

Emission Control Information label

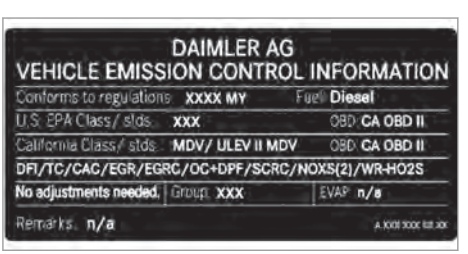

Example: Emission Control Information label

ⓘ The data is vehicle-specific and can differ from that shown.

Engine number
The engine number is stamped onto the crankcase. You can obtain further information from any qualified specialist workshop.

Operating fluids and capacities

Notes on operating fluids

WARNING Risk of injury from operating fluids harmful to your health

Operating fluids may be poisonous and harmful to your health.

- ▶ Observe the text on the original containers when using, storing or disposing of operating fluids.
- ▶ Always store operating fluids sealed in their original containers.
- ▶ Always keep children away from operating fluids.

ENVIRONMENTAL NOTE Environmental pollution due to disposing of operating fluids in a non-environmentally responsible manner

Operating fluids include the following:

- fuels
- exhaust gas aftertreatment additives, e.g. DEF
- lubricants

Incorrect disposal of operating fluids can cause considerable damage to the environment.

- ▶ Dispose of operating fluids in an environmentally responsible manner.

Operating fluids include the following:

- fuels
- exhaust gas aftertreatment additives, e.g. DEF
- lubricants
- coolant
- brake fluid
- windshield washer fluid
- climate control system refrigerants

Use only products recommended by Mercedes-Benz. Damage caused by the use of products that have not been approved is not covered by the Mercedes-Benz guarantee or goodwill gestures.

You can identify operating fluids approved by Mercedes-Benz by the following inscriptions on the container:

- MB-Freigabe (e.g. MB-Freigabe 229.51)
- MB-Approval (e.g. MB-Approval 229.51)

Further information on approved operating fluids:

- in the MB Specifications for operating fluids at http://bevo.mercedes-benz.com (by entering the designation)
- at a qualified specialist workshop

WARNING Risk of fire or explosion from fuel

Fuels are highly flammable.

- ▶ Fire, open flames, smoking and creation of sparks must be avoided.
- ▶ Switch off the ignition and, if available, the stationary heater, before and while refueling the vehicle.

WARNING Risk of injury from fuels

Fuels are poisonous and hazardous to your health.

- ▶ Do not swallow fuel or let it come into contact with skin, eyes or clothing.
- ▶ Do not inhale fuel vapor.
- ▶ Keep children away from fuel.
- ▶ Keep doors and windows closed during the refueling process.

If you or other people come into contact with fuel, observe the following:

- ▶ Immediately rinse fuel off your skin with soap and water.
- ▶ If fuel comes into contact with your eyes, immediately rinse them thoroughly with clean water. Seek medical attention immediately.
- ▶ If you swallow fuel, seek medical attention immediately. Do not induce vomiting.
- ▶ Change immediately out of clothing that has come into contact with fuel.

Fuel

Notes on fuel grades on vehicles with a gasoline engine

Observe the notes on operating fluids (→ page 233).

NOTE Do not use diesel to refuel vehicles with a gasoline engine.

If you accidentally refuel with the wrong fuel:

- Do not switch on the ignition. Otherwise fuel can enter the engine.

  Even small amounts of the wrong fuel could result in damage to the fuel system and the engine. The repair costs are high.

▶ Contact a qualified specialist workshop.

▶ Have the fuel tank and fuel lines drained completely.

Only refuel using low-sulfur regular fuel with at least 87 AKI/91 RON.

ⓘ E10 fuel contains an additive of up to 10% ethanol. Your vehicle is suitable for use with E10 fuel. You can fuel your vehicle with E10 fuel.

NOTE Damage caused by the wrong fuel

Even small amounts of the wrong fuel could result in damage to the fuel system, engine and exhaust system.

▶ Only refuel with the recommended fuel.

NOTE Damage caused by the wrong fuel

Even small amounts of the wrong fuel could result in damage to the fuel system, engine and exhaust system.

Never refuel with the following:

- Diesel
- Gasoline with more than 10% ethanol by volume, e.g. E15, E20, E85, E100
- Gasoline with more than 3% methanol by volume, e.g. M15, M30, M85, M100
- Gasoline with additives containing metal

▶ Do not mix such fuels with the fuel recommended for your vehicle.

ⓘ To ensure the longevity and performance of the engine, only unleaded regular gasoline may be used.

Note that the higher quality premium grade gasoline can be refueled at any time.

If you are using drums or canisters to refuel the vehicle, you should filter the fuel before filling. This will prevent malfunctions in the fuel system due to contaminated fuel.

Usually you will find information about the fuel grade on the fuel pump. If there is no identification on the fuel pump, consult a gas station attendant.

ⓘ For further information, contact a qualified specialist workshop or visit http://www.mbusa.com (USA only).

Notes on additives in gasoline

Observe the notes on operating fluids (→ page 233).

NOTE Damage from use of unsuitable additives

Even small amounts of the wrong additive may lead to malfunctions.

▶ Only add cleaning additives recommended by Mercedes-Benzto the fuel.

Mercedes-Benz recommends using brand-name fuels with additives.

In some countries, the available fuel may not contain sufficient amounts of additives. Deposits could build up in the fuel injection system as a result.

In this case, in consultation with an authorized Mercedes-Benz Center, the fuel should be mixed with the cleaning additive recommended by Mercedes-Benz.

You must observe the notes and mixing ratios indicated on the container.

Notes on fuel grades on vehicles with diesel engines

General notes

Observe the notes on operating fluids (→ page 233).

WARNING Risk of fire from fuel mixture

If you mix diesel fuel with gasoline, the flash point of the fuel mixture is lower than that of pure diesel fuel.

While the engine is running, component parts in the exhaust system may overheat without warning.

▶ Never refuel using gasoline in diesel engines.
▶ Never mix gasoline with diesel fuel.

NOTE Damage due to incorrect fuel

Even small amounts of the wrong fuel could result in damage to the fuel system, the engine and emission control system.

Never refuel with:

- Gasoline
- Marine diesel
- Heating oil
- Pure bio-diesel or vegetable oil
- Paraffin or kerosene

▶ Do not mix such fuels with diesel fuel and do not use any special additives.

If you have accidentally refueled with the wrong fuel, observe the following:

▶ Do not switch on the ignition.
▶ Consult a qualified specialist workshop.

NOTE Malfunctions due to contaminated fuel

Fuel contamination can lead to malfunctions in the fuel system.

▶ If you are using drums or canisters to refuel the vehicle, you should filter the fuel before filling.

NOTE Damage due to incorrect fuel

Incorrect fuel can lead to engine damage.

▶ Refuel only ULSD or diesel fuel with a sulfur content of maximum 15 ppm.

Usually you will find information about the fuel grade on the fuel pump. If there is no identification on the fuel pump, consult a gas station attendant.

The fuel grade recommended for your vehicle is found on the instruction label in the fuel filler flap .

Notes on low outside temperatures

WARNING Risk of fire and explosion due to fuel igniting

If you heat fuel system components, e.g. with a heat gun or open flame, these components could be damaged.

Fuel may leak out and ignite. Depending on the type of damage, fuel might not escape until the engine is running.

▶ Never heat fuel system components.
▶ Consult a qualified specialist workshop to have the malfunction rectified.

Refill only with commercially available ULTRA-LOW SULFUR DIESEL (ULSD, maximum sulfur content 15 ppm), which fulfills the ASTM D975 standard.

The flow properties of diesel fuel may be inadequate at low outside temperatures due to paraffin separation.

ⓘ Malfunctions resulting from paraffin separation can only be rectified by heating the entire fuel system. Park the vehicle in a heated garage, for example.

To prevent malfunctions, diesel fuel with improved flow characteristics is available in the winter months. You can obtain further information on this at the gas station or from your fuel supplier.

Your vehicle is equipped with a fuel preheating system. This additionally improves the flow characteristics of the diesel fuel by about 14.5 °F (8 °C). ULTRA-LOW SULFUR DIESEL can be used without risk of malfunction down to an outside temperature of approximately 14.5 °F (-10 °C).

NOTE Damage due to gasoline or paraffin

Gasoline or paraffin in diesel fuel impairs the lubricity of the fuel. This can result in damage to the fuel injection system, for example.

▶ Do not add any gasoline or paraffin to diesel fuel to improve its flow characteristics.

B20 fuels with bio-diesel content

NOTE Damage due to incorrect fuel

Continuous use of fuels with bio-diesel content over 5% (B20 fuels) can lead to fuel filter

clogging. Deposits may also form on the fuel injector. This may reduce the engine output. Unburned fuel can get into the oil pan. This causes the engine oil level to rise. This can cause engine mechanical damage.

Observe the following points to avoid damage and reducing the engine output:

- ▶ Fill up with fuels with bio-diesel content of 5% (ULSD) or less, whenever possible.
- ▶ Regularly check your engine oil level if you use B20 fuels on a regular basis.
- ▶ Strictly follow the oil change intervals quoted in the instrument cluster and within your Maintenance Booklet.
- ▶ Use only engine oils and filters approved for use in your vehicle.
- ▶ If you do not plan to drive your vehicle for several weeks, completely fill the fuel tank in advance with ULSD fuel.

For more information, consult the gas station staff. The identification of fuels with bio-diesel content (ULSD or B20) must be clear. If the identification is not clear, do not refuel. Do not refuel with any fuels that have not been approved for your vehicle.

Tank content and fuel reserve

The total capacity of the fuel tank may vary, depending on the vehicle equipment.

Tank content and fuel reserve

Gasoline engine	Total capacity
M274	approx. 22 gal (85 liters)
Diesel engine	**Total capacity**
OM651/OM642	approx. 24.5 gal (93 liters)

Gasoline engine	Of which reserve fuel
Models with approx. 19 gal (85 l) total capacity	approx. 5 gal (19 liters)
Diesel engine	**Of which reserve fuel**
Models with approx. 20 gal (93 l) total capacity	approx. 5 gal (19 liters)

DEF

Notes on DEF

Observe the notes on operating fluids (→ page 233).

DEF is a water-soluble fluid for the exhaust gas aftertreatment of diesel engines.

NOTE Damage caused by additives in DEF or by diluting DEF

The DEF exhaust gas aftertreatment system could be destroyed by the following:

- Additives in DEF
- Diluting DEF

- ▶ Only use DEF in accordance with ISO 22241.
- ▶ Do not mix additives.
- ▶ Do not dilute DEF.

NOTE Damage and malfunctions caused by impurities in DEF

Impurities in DEF result in the following:

- Higher emission values
- Damage to the catalytic converter
- Engine damage
- Malfunctions in the DEF exhaust gas aftertreatment system

- ▶ Avoid impurities in DEF.

ENVIRONMENTAL NOTE Soiling with DEF

DEF residue crystallizes after some time and stain the affected surfaces.

▶ Immediately rinse surfaces that come in contact with DEF when filling with water or remove DEF with a damp cloth and cold water.

If DEF has already crystallized, clean using a sponge and cold water.

If you open the DEF tank, small amounts of ammonia vapor may be released. Do not inhale any ammonia vapor that may be released. Fill the DEF tank only in well-ventilated areas.

DEF consumption and filling capacity

DEF consumption
Like fuel consumption, DEF consumption is highly dependent upon driving style and operating conditions. DEF consumption is usually within a range of 0 and 10% of the fuel consumption. If necessary, DEF must be refilled in accordance with the instructions when the refill message is displayed in the instrument cluster. This may also be necessary between the scheduled maintenance.

Total capacity of DEF tank

Vehicle	Total capacity
All models	5.8 gal (22 liters)

Exhaust gas aftertreatment
The exhaust gas aftertreatment system must be operated in conjunction with DEF if it is to function correctly.

If you operate the vehicle without DEF or with emissions-relevant malfunctions, the legal MOT approval is invalidated. You will then probably no longer be permitted to operate the vehicle on public roads.

It may be improper or punishable in some countries to operate a vehicle that uses no DEF or one that does not comply with the specifications of these operating instructions.

Engine management monitors the exhaust gas aftertreatment components for compliance with emissions laws and regulations. If you attempt to operate the vehicle without DEF, with diluted DEF or with a different reducing agent, this will be detected by the engine management system. Other emissions-relevant malfunctions, e.g. metering malfunctions or sensor errors, are also detected and logged.

The engine management system subsequently prevents the engine being restarted after issuing a warning message.

Therefore add DEF tank regularly during vehicle operation or, at the latest, after receiving the first warning message via the instrument cluster.

Engine oil

Notes on engine oil
Observe the notes on operating fluids (→ page 233).

! **NOTE** Engine damage caused by an incorrect oil filter, incorrect oil or additives

▶ Do not use engine oils or oil filters other than those which meet the specifications necessary for the prescribed service intervals.

▶ Do not alter the engine oil or oil filter in order to achieve longer change intervals than prescribed.

▶ Do not use additives.

▶ Have the engine oil changed after the prescribed intervals.

Mercedes-Benz recommends having the oil changed at a qualified specialist workshop.

Further information on engine oil and oil filter:

- in the MB Specifications for operating fluidsat http://bevo.mercedes-benz.com (by entering the designation)
- at a qualified specialist workshop

Quality and capacity of engine oil

ⓘ The containers of the various engine oils are marked with the ACEA (Association of European Automotive Manufacturers) and/or API (America Petroleum Institute) classifications. Only use approved engine oils that correspond to the MB Specifications for operating fluids and the prescribed ACEA and/or API classifications named below. Engine oils of other grades are not permissible and can result in the loss of the New Vehicle Limited Warranty. The use of other engine oils not approved for diesel engines can damage the diesel particulate filter (DPF).

MB-Freigabe orMB-Approval

Gasoline engine	MB-Freigabe orMB-Approval
M274	229.5
Diesel engines	**MB-Freigabe orMB-Approval**
OM642/OM651	228.51, 229.31, 229.51, 229.52

If the engine oils listed in the table are not available, you may add a maximum 1.1 US qt (1.0 liter) of the following engine oils once only:

- **Vehicles with a gasoline engine:** MB-Freigabe or MB-Approval 229.3 or ACEA A3/B4
- **Vehicles with a diesel engine:** MB-Freigabe or MB-Approval 228.5, 229.3 or 229.5

Multigrade engine oils of the prescribed SAE classification (viscosity) may be used all year round, taking the outside temperature into account.

Viscosity of the engine oil

NOTE Engine damage due to incorrect SAE classification (viscosity) of the engine oil

If the SAE classification (viscosity) of the engine oil added is not suitable for prolonged low outside temperatures, it may cause engine damage.

The temperature readings of the SAE classification are always based on fresh oil. Engine oil ages when driving as a result of soot and fuel residue. The characteristics of engine oil deteriorate significantly at low outside temperatures.

- ▶ Use an engine oil of the appropriate SAE classification at low outside temperatures.
- ▶ Use oil for all-year-round operation.

The temperature readings of the SAE classification are always based on fresh oil. The temperature characteristics of the engine oil, especially at low outside temperatures, can deteriorate significantly due to aging when driving.

Therefore, Mercedes-Benz recommends that you change the engine oil before the start of the cold season. Only use an approved engine oil in the prescribed SAE classification for this purpose.

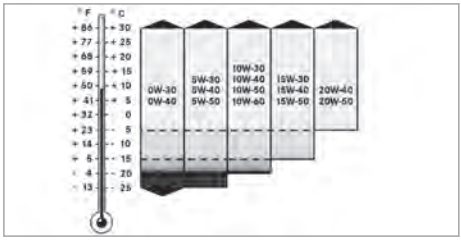

The viscosity indicates the flow characteristics of a fluid. With regard to engine oil, a high viscosity is synonymous with thick liquid and a low viscosity with thin liquid. Depending on the outside temperatures, select the engine oil according to the SAE classification (viscosity). The table shows the SAE classifications to be used. The low temperature characteristics of engine oils can deteriorate significantly during operation due to aging and soot and fuel accretion, for example. A regular oil change with an approved engine oil in the appropriate SAE classification is therefore strongly recommended.

Additive

NOTE Engine damage due to use of additives in the engine oil

The use of additional additives in the engine oil can damage the engine.

- ▶ Do not use any additional additives in the engine oil.

Miscibility of engine oil

The benefits of high-quality engine oils are reduced by mixing oil.

We recommend that you only use engine oil of the same grade and SAE classification as the oil filled at the last oil change. If, in exceptional

cases, oil of the type in the engine is not available, use another approved mineral or synthetic engine oil.

Vehicles with a diesel engine: if the grade is not available, you may also refill with engine oils according to MB-Freigabe or MB-Approval 228.5, 229.3 or 229.5. The top-up quantity is then limited to maximum 1.1 US qt (1.0 liter).

You must then have an oil change carried out at the earliest possible opportunity.

Vehicles with a gasoline engine: if the grade is not available, you may refill with engine oils according to MB-Freigabe or MB-Approval 229.3 or ACEA A3/B4. The top-up quantity is then limited to maximum 1.1 US qt (1.0 liter).

You must then have an oil change carried out at the earliest possible opportunity.

Engine oils are distinguished by:

- engine oil brand
- grade (MB-Freigabe or MB-Approval)
- SAE classification (viscosity)

Oil change interval

The on-board computer automatically shows the date of the next oil change as an event message on the display.

Mercedes-Benz recommends having the oil changed at a qualified specialist workshop.

Engine oil capacities

Engine	Engine oil
M274	around 11.2 qt (10.5 liters)
OM642	around 13.2 qt (12.5 liters)
OM651 (rear wheel drive)	around 12 qt (11.5 liters)

Information on oil consumption

Depending on the driving style, the vehicle consumes a maximum of 1.1 US qt (1.0 liter) of engine oil per 620 miles (1000 km).

In the following cases, oil consumption may also exceed this limit:

- the vehicle is new.
- you use the vehicle mostly under arduous conditions.
- you drive frequently at a high engine speed.

Regular maintenance is a prerequisite for favorable consumption figures. You can only assess the oil consumption after a long journey. Check the oil level in the engine regularly, e.g. weekly or every time you refuel.

Notes on brake fluid

Observe the notes on operating fluids (→ page 233).

WARNING Risk of an accident due to vapor pockets forming in the brake system

The brake fluid constantly absorbs moisture from the air. This lowers the boiling point of the brake fluid. If the boiling point is too low, vapor pockets may form in the brake system when the brakes are applied hard.

This causes the braking effect to be impaired.

▶ Have the brake fluid renewed at the specified intervals.

NOTE Damage to paint, plastic or rubber by brake fluid

There is a risk of damage to property if brake fluid comes into contact with paint, plastic or rubber.

▶ If paint, plastic or rubber comes into contact with brake fluid, rinse with water immediately.

Observe the notes on paintwork/matte finish paintwork care (→ page 182).

Have the brake fluid replaced regularly at a qualified specialist workshop.

Only use brake fluid approved by Mercedes-Benz in accordance with MB-Freigabe or MB-Approval 331.0.

Further information on brake fluid:

- in the MB Specifications for operating fluids at http://bevo.mercedes-benz.com
- at a qualified specialist workshop

Coolant

Notes on coolant

Observe the notes on operating fluids (→ page 233).

WARNING - Risk of fire and injury from antifreeze

If antifreeze comes into contact with hot component parts in the engine compartment, it may ignite.

- Allow the engine to cool down before adding antifreeze.
- Make sure that no antifreeze spills out next to the filler opening.
- Thoroughly clean off any antifreeze from component parts before starting the vehicle.

NOTE Damage caused by incorrect coolant

- Only add coolant that has been premixed with the required antifreeze protection.

Information on coolant is available at the following locations:

- in the MB Specifications for operating fluids 310.1
  - at http://bevo.mercedes-benz.com
  - in the BeVo app
- at a qualified specialist workshop

NOTE Overheating at high outside temperatures

If an inappropriate coolant is used, the engine cooling system is not sufficiently protected against overheating and corrosion at high outside temperatures.

- Always use a coolant approved by Mercedes-Benz.
- Observe the instructions in the MB Specifications for operating fluids310.1.

NOTE Paintwork damage due to coolant

- Do not spill coolant on painted surfaces.

Have the coolant regularly replaced at a qualified specialist workshop.

Note the proportion of anti-corrosion agent/antifreeze in the engine cooling system within the following temperature ranges:

- At least 50% (antifreeze protection up to about -35 °F (-37 °C))
- Maximum 55% (antifreeze protection up to -49 °F (-45 °C))

Coolant capacities

Engine cooling system

Engine	Coolant
M274	approx. 3.0 gal (11.5 liters)
OM642	approx. 2.6 gal (10 liters)
OM651	approx. 2.5 gal (9.5 liters)

Windshield washer fluid

Notes on windshield washer fluid

Observe the notes on operating fluids (→ page 233).

WARNING - Risk of fire and injury from windshield washer concentrate

Windshield washer concentrate is highly flammable. It could ignite if it comes into contact with hot engine component parts or the exhaust system.

- Make sure that no windshield washer concentrate spills out next to the filler opening.

NOTE Damage to the exterior lighting due to unsuitable windshield washer fluid

Unsuitable windshield washer fluid may damage the plastic surface of the exterior lighting.

- Only use windshield washer fluid which is also suitable for use on plastic surfaces, e.g. MB SummerFit or MB WinterFit.

NOTE Blocked spray nozzles caused by mixing windshield washer fluids

- Do not mix MB SummerFit and MB WinterFit with other windshield washer fluids.

Do not use distilled or de-ionized water. Otherwise, the level sensor may give a false reading.

Information on the windshield washer fluid

Recommended windshield washer fluid:

- above freezing point: e.g. MB SummerFit
- below freezing point: e.g. MB WinterFit

Mixing ratio

For the correct mixing ratio, refer to the information on the anti-freeze container.

Mix the washer fluid with windshield washer fluid all year round.

Filling capacities

Windshield washer system

Washer fluid	5.8 qt (5.5 l)

Refrigerant

Notes on refrigerant

Observe the notes on operating fluids (→ page 233).

ⓘ Your vehicle's climate control system can be filled with R-134a refrigerant. The refrigerant R-134a contains fluorinated greenhouse gas.

If your vehicle is filled with R-134a refrigerant, the following information applies:

NOTE Damage caused by incorrect refrigerant

If the incorrect refrigerant is used, this can damage the climate control system.

▶ Use only R-134a refrigerant or the PAG oil approved for your vehicle by Mercedes-Benz.

▶ The approved PAG oil may not be mixed with any other PAG oil that is not approved for R-134a refrigerant.

Maintenance work, such as adding refrigerant or replacing components, may be carried out only by a qualified specialist workshop. All the applicable regulations relating to this and the SAE J639 standard must be adhered to.

All work on the climate control system should always be carried out at a qualified specialist workshop.

Example: refrigerant warning label

1. Warning symbols
2. Refrigerant capacity
3. Applicable standards
4. PAG oil part number
5. Refrigerant type

Warning symbols (1) refer to the following:

- Potential dangers
- The performance of maintenance work at a qualified specialist workshop

Vehicle data

Information on vehicle dimensions

The following section contains important technical data for your vehicle. Your vehicle documents contain further vehicle-specific and equipment-dependent technical data such as vehicle dimensions and weights.

Trailer hitch

Notes on the trailer hitch

WARNING Risk of accident due to aftermarket installation of a trailer hitch that is not permissible

If aftermarket installation of a trailer hitch is not permissible and you install a trailer hitch or other assembly parts, the longitudinal frame member will be weakened and may break. In this case, the trailer may come loose from the vehicle.

There is a risk of an accident.

Only install a trailer hitch aftermarket if it is permissible.

Observe the notes on trailer operation (→ page 151).

Retrofitting a trailer hitch is only permissible if a towing capacity is specified in your vehicle documents.

You can obtain further information on the trailer hitch at a qualified specialist workshop.

Mercedes-Benz recommends that you have a trailer hitch retrofitted at an authorized Mercedes-Benz Center.

Only use a trailer hitch which has been tested and specially approved by Mercedes-Benz for your vehicle.

Use only a ball neck that has been approved for your vehicle and for your Sprinter trailer hitch. Notes on the permissible dimensions of the ball neck can also be found on the identification plate of the trailer hitch.

The maximum permissible towing capacity for trailers without a separate braking system is 1,653 lbs (750 kg).

Trailer loads

The permissible weights and loads which must not be exceeded can also be obtained from the following sources of information:

- Vehicle documents
- The identification plates of the trailer hitch, trailer and vehicle

The values approved by the manufacturer can be found in the following table. If the values differ, the lowest value applies. Use a calibrated weighing machine to check the weight restrictions have been complied with before you start your journey.

Maximum permissible weights and loads
Vehicle type, gross vehicle weight and curb weight

Vehicle model	Permissible gross vehicle weight GVWR	Permissible curb weight [1]
1500	8550 lbs (3.878 t)	7400 lbs (3.357 t)[2]
	9050 lbs (4.105 t)	7400 lbs (3.357 t)[2]
	9480 lbs (4.300 t)	7000 lbs (3.175 t)
2500	8550 lbs (3.878 t)	7400 lbs (3.357 t)
	9050 lbs (4.105 t)	7400 lbs (3.357 t)
	9480 lbs (4.300 t)	7400 lbs (3.357 t)
3500	9900 lbs (4.490 t) (For Canada only)	7400 lbs (3.357 t)[2]
	9990 lbs (4.531 t) (For USA only)	7400 lbs (3.357 t)[2]
3500 XD	11030 lbs (5.003 t)	10470 lbs (4.749 t)
4500	12125 lbs (5.500 t)	9375 lbs (4.252 t)

[1] Maximum permissible curb weight of a roadworthy vehicle without driver or occupants, including all fluids and their tanks when filled up to 100%.

[2] In conjunction with code S20, the maximum permissible curb weight of the vehicle is 6725 lbs (3.050 t).

Front axle load, rear axle load, gross weight of vehicle combination (series, optional)
Vehicle types 1500 and 2500 with a max. permissible gross weight of 8550 lbs (3.878 t) and 9050 lbs (4.105 t)

Permissible front axle load GAWR (FA)	Permissible rear axle load GAWR (RA)
4100 lbs (1.860 t)[4)]	5360 lbs (2.431 t)
4410 lbs (2.000 t)	5360 lbs (2.431 t)

Vehicle types 1500 and 2500 with a max. permissible gross weight of 9480 lbs (4.300 t)

Permissible front axle load GAWR (FA)	Permissible rear axle load GAWR (RA)
4410 lbs (2.000 t)	5360 lbs (2.431 t)

Vehicle type 3500 with a max. permissible gross weight of 9900 lbs (4.490 t) (For Canada only) and 9990 lbs (4.531 t) (For USA only)

Permissible front axle load GAWR (FA)	Permissible rear axle load GAWR (RA)
4080 lbs (1.851 t)[4)]	7060 lbs (3.202 t)
4410 lbs (2.000 t)	7060 lbs (3.202 t)

Vehicle type 3500 XD with a max. permissible gross weight of 11,030 lbs (5.003 t)

Permissible front axle load GAWR (FA)	Permissible rear axle load GAWR (RA)
4080 lbs (1.851 t)[4)]	7720 lbs (3.502 t)
4410 lbs (2.000 t)	7720 lbs (3.502 t)

Vehicle type 4500 with a max. permissible gross weight of 12,125 lbs (5.500 t)

Permissible front axle load GAWR (FA)	Permissible rear axle load GAWR (RA)
4630 lbs (2.100 t)	7935 lbs (3.599 t)

[3)] Maximum permissible gross weight of vehicle and trailer combination.

[4)] Not in combination with all-wheel drive (4x4) and not in combination with model series 907.745 (combination vehicles with a vehicle length of 274.3 in (6967 mm))

Gross weight of vehicle combination, trailer load, tongue weight
Vehicle types 1500 and 2500 with a max. permissible gross weight of 8550 lbs (3.878 t)

Permissible gross weight of vehicle/trailer combination GCWR[3), 5)]	Permissible trailer load GTW, braked[6)]	Permissible noseweight TWR
13550 lbs (6.146 t)	5000 lbs (2.270 t)	500 lbs (0.227 t)

Vehicle types 1500 and 2500 with a max. permissible gross weight of 9050 lbs (4.105 t)

Permissible gross weight of vehicle/trailer combination GCWR[3), 5)]	Permissible trailer load GTW, braked[6)]	Permissible noseweight TWR
13930 lbs (6.319 t)	5000 lbs (2.270 t)	500 lbs (0.227 t)

Vehicle types 1500 and 2500 with a max. permissible gross weight of 9480 lbs (4.300 t)

Permissible gross weight of vehicle/trailer combination GCWR[3), 5)]	Permissible trailer load GTW, braked[6)]	Permissible noseweight TWR
9480 lbs (4.300 t)	–	–

Vehicle type 3500 with a max. permissible gross weight of 9900 lbs (4.490 t) (For Canada only)

Permissible gross weight of vehicle/trailer combination GCWR[3), 5)]	Permissible trailer load GTW, braked[6)]	Permissible noseweight TWR
14900 lbs (6.760 t) only for model series 907.657[7)]	5000 lbs (2.270 t) only for model series 907.657[7)]	500 lbs (0.227 t) only for model series 907.657[7)]
15250 lbs (6.917 t) only for model series 907.657	7500 lbs (3.400 t) only for model series 907.657	750 lbs (0.340 t) only for model series 907.657

Vehicle type 3500 with a max. permissible gross weight of 9990 lbs (4.531 t) (For USA only)

Permissible gross weight of vehicle/trailer combination GCWR[3), 5)]	Permissible trailer load GTW, braked[6)]	Permissible noseweight TWR
14990 lbs (6.799 t) only for model series 907.657[7)]	7500 lbs (3.400 t) only for model series 907.657	750 lbs (0.340 t) only for model series 907.657
15250 lbs (6.917 t) only for model series 907.657	5000 lbs (2.270 t) only for model series 907.657[7)]	500 lbs (0.227 t) only for model series 907.657[7)]

Vehicle type 3500 XD with a max. permissible gross weight of 11,030 lbs (5.003 t)

Permissible gross weight of vehicle/trailer combination GCWR[3), 5)]	Permissible trailer load GTW, braked[6)]	Permissible noseweight TWR
15250 lbs (6.917 t)	5000 lbs (2.270 t) only for model series 907.657[7)]	500 lbs (0.227 t) only for model series 907.657[7)]
15250 lbs (6.917 t)	Optional: 7500 lbs (3.400 t) not for model series 907.657	Optional: 750 lbs (0.340 t) not for model series 907.657

Vehicle type 4500 with a max. permissible gross weight of 12,125 lbs (5.500 t)

Permissible gross weight of vehicle/trailer combination GCWR[3), 5)]	Permissible trailer load GTW, braked[6)]	Permissible noseweight TWR
15250 lbs (6.917 t)	5000 lbs (2.270 t) only for model series 907.657[7)]	500 lbs (0.227 t) only for model series 907.657[7)]
15250 lbs (6.917 t)	Optional: 7500 lbs (3.400 t) not for model series 907.657	Optional: 750 lbs (0.340 t) not for model series 907.657

[3)] Maximum permissible gross weight of vehicle and trailer combination.

[4)] Not in combination with all-wheel drive (4x4) and not in combination with model series 907.745 (combination vehicles with a vehicle length of 274.3 in (6967 mm))

[5)] It is not possible to tow a trailer on vehicles which have not been equipped with a trailer coupling as standard. In this case, the maximum permissible gross vehicle weight corresponds to the maximum permissible gross weight of the vehicle combination.

ⓘ If the trailer coupling is retrofitted, the identification plates should be adapted accordingly with the altered, maximum permissible weights. Please consult an authorized Mercedes-Benz Center if you have any further questions.

[6)] Maximum permissible gross weight of the trailer if the trailer is equipped with a separate brake system.

[7)] The vehicle length for vehicles with the model series 907.657 (Cargo Van) is 290 in (7367 mm).

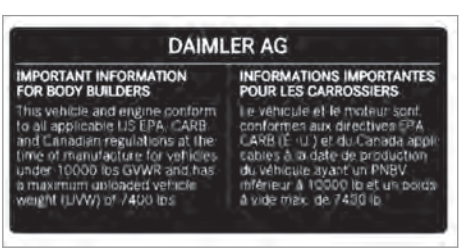

The body builder label is found on the front-end module above the radiator and contains the maximum permissible curb weight for the vehicles.

Lashing points and carrier systems

Information about the cargo tie-down points

! **NOTE** Risk of accident if the maximum loading capacity of the cargo tie-down point is exceeded

If you combine various cargo tie-down points to secure a load, always take the maximum loading capacity of the weakest cargo tie-down point into account.

During maximum full-stop braking, forces may act which can multiply the weight of the load.

▶ Always use several cargo tie-down points to distribute and spread the load. Distribute the load on the cargo tie-down points evenly.

Further information on the cargo tie-down points and tie-down eyes can be obtained in the "Transporting" section (→ page 167).

Tie-down eyes

Max. tensile load (tie-down eyes)

Tie-down eyes	Permissible nominal tensile strength
Passenger Van	350 daN
Cargo Van	800 daN

Loading rails

Max. tensile load of cargo tie-down points in cargo compartment

Cargo tie-down point	Permissible nominal tensile strength
Loading rails on cargo compartment floor	500 daN
Lower loading rail on side wall	200 daN
Upper loading rail on side wall	125 daN

The values specified apply only to loads resting on the cargo compartment floor if you observe the following:

- the load is secured to two cargo tie-down points on the rail
- the distance to the nearest load-securing point on the same rail is approximately 1 m

Information about roof racks

WARNING Risk of injury due to the maximum roof load being exceeded

When you place a load on the roof as well as all outer and inner attachments, the vehicle's center of gravity will rise and the familiar driving characteristics as well as the steering and braking characteristics will change. When driving around bends, the vehicle will tilt more heavily and may react more sluggishly to steering movements.

If you exceed the maximum roof load, the driving characteristics, as well as the steering and braking, will be greatly impaired.

▶ Never exceed the maximum roof load and adjust your driving style.

WARNING Danger of accident due to uneven loading

If you load the vehicle unevenly, the handling characteristics as well as the steering- and braking characteristics can be heavily impaired.

▶ Load the vehicle evenly.

▶ Secure the load against sliding.

The driving, braking and steering characteristics of the vehicle change with the type of load, the weight and the center of gravity of the load.

NOTE Risk of accident if the maximum permitted roof load is exceeded.

If the weight of the roof luggage, including the roof rack, exceeds the maximum permitted roof load, there is a risk of an accident.

▶ Ensure that the weight of the roof luggage and roof rack together does not exceed the maximum permitted roof load.

▶ The roof rack's supporting feet must be arranged at a uniform distance from each other.

▶ Mercedes-Benz recommends you install a stabilizer bar on the vehicle's front axle.

Further information about safety measures can be found in the "Transport" section (→ page 167).

Max. roof load / pairs of supporting roof rack feet

Vehicles with	Maximum roof load	Minimum number of pairs of supporting feet
Normal roof	661 lbs (300 kg)	6
High roof	331 lbs (150 kg)	3

This information applies if the load is distributed evenly across the entire roof surface.

If the roof rack is shorter, reduce the load proportionately. The maximum load per pair of supporting roof rack feet is 110 lbs (50 kg).

The loading guidelines and other information about load distribution and load securing can be found in the "Transport" section (→ page 167).

Display messages

Introduction

Function of display messages

The display messages appear on the multifunction display.

The display messages with graphic displays can be displayed in simplified format in the operating instructions and may deviate from the display on the multifunction display. The multifunction display shows high-priority display messages in red. In addition, a warning tone sounds for specific display messages.

Act in accordance with the display messages and comply with the additional instructions in this operating instructions.

In addition, symbols are shown for some display messages:

- [i] Further information
- [⊠] Hiding display messages

You can use the left-hand Touch Control to select between the symbols by swiping to the left or right. Pressing [i] displays further information on the multifunction display. Pressing [⊠] hides the display message.

You can hide low-priority display messages by pressing the [⌂⇦] button or with the left-hand Touch Control. The display messages are saved in the message memory.

Rectify the cause of a display message as quickly as possible.

You cannot hide high-priority display messages. The multifunction display will show these display messages until their causes have been rectified.

Calling up saved display messages

On-board computer:

→ Service ▶▶ 1 Message

If there are no display messages, No Messages appears on the multifunction display.

▶ Browse through the display messages by swiping upwards or downwards on left-hand Touch Control.

▶ **Exiting the message memory:** press the [⇦] button.

Safety systems

Display messages	Possible causes/consequences and ▶ Solutions
 Left Side Curtain Airbag Malfunction Service Required (example)	* The window curtain airbag in question is malfunctioning . ⚠ **WARNING** Risk of injury or fatal injury due to malfunctions in the window airbag If the window airbag is malfunctioning, it might be triggered unintentionally or might not be triggered at all in the event of an accident with high deceleration. ▶ Have the window airbag checked and repaired immediately at a qualified specialist workshop. ▶ Visit a qualified specialist workshop immediately.
 Front Left Malfunction Service Required (example)	* The restraint system in question is malfunctioning . ⚠ **WARNING** Risk of injury due to malfunctions in the restraint system If the restraint system is malfunctioning, restraint system components may be triggered unintentionally or may not deploy as intended during an accident. This may affect the Emergency Tensioning Devices or airbags, for example. ▶ Have the restraint system checked and repaired immediately at a qualified specialist workshop.

Display messages	Possible causes/consequences and ▶ Solutions
	Detection of a restraint system malfunction: • The restraint system warning lamp does not light up when the ignition is switched on. • The restraint system warning lamp lights up continuously or repeatedly during a journey. ▶ Visit a qualified specialist workshop immediately.
 SRS Malfunction Service Required	* The restraint system is malfunctioning . ⚠ **WARNING** Risk of injury due to malfunctions in the restraint system If the restraint system is malfunctioning, restraint system components may be triggered unintentionally or may not deploy as intended during an accident. This may affect the Emergency Tensioning Devices or airbags, for example. ▶ Have the restraint system checked and repaired immediately at a qualified specialist workshop. Detection of a restraint system malfunction: • The restraint system warning lamp does not light up when the ignition is switched on. • The restraint system warning lamp lights up continuously or repeatedly during a journey. ▶ Visit a qualified specialist workshop immediately.
 Parking Brake Inoperative	* A malfunction has occurred in the system, the parking brake is inoperative. ⚠ **WARNING** Risk of an accident due to a brake system malfunction If the brake system is malfunctioning, braking characteristics may be impaired. ▶ Drive on carefully. ▶ Have the brake system checked immediately at a qualified specialist workshop. ▶ Park the vehicle on a level surface only and secure it against rolling away. ▶ **Vehicles with automatic transmission:** shift the transmission to position P. ▶ Have the brake system checked at a qualified specialist workshop immediately.
 Incline Too Steep See Operator's Manual	* The on-board electrical system voltage is low or a malfunction has occurred in the system; the holding force may not be sufficient for the incline.

Display messages	Possible causes/consequences and ▶ Solutions
	⚠ **WARNING** Risk of accident if the electrical parking brake has insufficient holding force If the electrical parking brake does not have sufficient holding force on a steep incline, the vehicle may roll away. ▶ Park the vehicle on a level surface only and secure it against rolling away. ▶ Shift the automatic transmission to position P. Observe the notes on parking the vehicle (→ page 132).
 Parking Brake See Operator's Manual	* The on-board voltage is low or a malfunction has occurred in the system; the closing force may not be sufficient for the incline. ⚠ **WARNING** Risk of an accident due to a brake system malfunction If the brake system is malfunctioning, braking characteristics may be impaired. ▶ Drive on carefully. ▶ Have the brake system checked immediately at a qualified specialist workshop. ▶ Park the vehicle on a level surface only and secure it against rolling away. ▶ **Vehicles with automatic transmission:** shift the transmission to position P. ▶ Have the brake system checked at a qualified specialist workshop immediately.
Check Brake Pads See Operator's Manual	* The brake pads have reached their wear limit. ⚠ **WARNING** Risk of accident due to restricted braking power When the brake pads have reached their wear limit, the braking power may be restricted. ▶ Drive on carefully. ▶ Have the brake system checked immediately at a qualified specialist workshop. ▶ Visit a qualified specialist workshop.
 Check Brake Fluid Level	* There is not enough brake fluid in the brake fluid reservoir. ⚠ **WARNING** Risk of an accident due to low brake fluid level If the brake fluid level is too low, the braking effect and the braking characteristics may be impaired. ▶ Pull over and stop the vehicle safely as soon as possible, paying attention to road and traffic conditions. Do not continue driving under any circumstances. ▶ Consult a qualified specialist workshop. ▶ Do not add brake fluid.

Display messages	Possible causes/consequences and ▶ Solutions
	▶ Stop in a safe location immediately. Do not continue driving. ▶ Consult a qualified specialist workshop. ▶ Do not add brake fluid.
Caution Brakes Overheated Drive Carefully	* If the all-wheel drive has been switched on, the brake system can overheat during extreme off-road use. ▶ Decelerate or stop and let the brake system cool down.
Active Brake Assist Functions Limited See Operator's Manual	* Active Brake Assist is malfunctioning. ▶ Visit a qualified specialist workshop.
Active Brake Assist Functions Currently Limited See Operator's Manual	* Active Brake Assist is temporarily unavailable. The ambient conditions are outside the system limits (→ page 139). ▶ Continue driving. When the ambient conditions are within the system limits, the system will be available again. ▶ If the display message does not go out, stop in a safe location and re-start the engine.
Radar Sensors Dirty See Operator's Manual	* The radar sensor system is malfunctioning. Possible causes: • dirt on the sensors • heavy precipitation • extended country drives without other traffic, e.g. in the desert Driving systems and driving safety systems may be malfunctioning or temporarily unavailable. When the causes have been eliminated, the driving systems and driving safety systems will be available again. If the display message does not disappear, proceed as follows: ▶ Stop in accordance with the traffic conditions. ▶ Clean all sensors (→ page 183). ▶ Re-start the engine.
SOS NOT READY	* The emergency call system is not available. Possible causes for this include: • The ignition is switched off • The emergency call system is malfunctioning. ▶ Switch on the ignition. If an emergency call is unavailable, a message to this effect will appear on the multifunction display of the instrument cluster. ▶ Visit a qualified specialist workshop. ⓘ You can find more information on the regional availability of the emergency call system at: http://www.mercedes-benz.com/connect_ecall

Display messages	Possible causes/consequences and ▶ Solutions
EBD ABS Inoperative See Operator's Manual	* EBD, ABS and ESP® are malfunctioning. Other driving systems and driving safety systems may also be malfunctioning. **⚠ WARNING** Risk of skidding if EBD, ABS and ESP® are malfunctioning If EBD, ABS and ESP® are malfunctioning, the wheels can lock when braking and ESP® cannot carry out vehicle stabilization. The steering capability and braking characteristics are thus severely impaired. The braking distance in an emergency braking situation can increase. In addition, other driving safety systems are switched off. ▶ Drive on carefully. ▶ Have the brake system checked immediately at a qualified specialist workshop. ▶ Drive on carefully. ▶ Visit a qualified specialist workshop immediately.
Inoperative See Operator's Manual	* ESP® is malfunctioning. Other driving systems and driving safety systems may also be malfunctioning. The brake system continues working with the normal effect. The braking distance can increase in emergency braking situations. **⚠ WARNING** Risk of skidding if ESP® is malfunctioning If ESP® is malfunctioning, ESP® cannot carry out vehicle stabilization. In addition, other driving safety systems are switched off. ▶ Drive on carefully. ▶ Have ESP® checked at a qualified specialist workshop. ▶ Continue driving carefully. ▶ Visit a qualified specialist workshop immediately.
Currently Unavailable See Operator's Manual	* ESP® is temporarily unavailable. Other driving systems and driving safety systems may also be malfunctioning. **⚠ WARNING** Risk of skidding if ESP® is malfunctioning If ESP® is malfunctioning, ESP® cannot carry out vehicle stabilization. In addition, other driving safety systems are switched off. ▶ Drive on carefully. ▶ Have ESP® checked at a qualified specialist workshop. ▶ Carefully drive some gentle curves at above 19 mph (30 km/h) on a suitable stretch of road.

Display messages	Possible causes/consequences and ▶ Solutions
	▶ If the display message does not go out, visit a qualified specialist workshop immediately. Drive carefully when doing so.
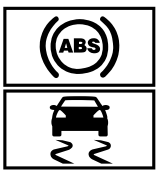 Currently Unavailable See Operator's Manual	* ABS and ESP® are temporarily unavailable. Other driving systems and driving safety systems may also be temporarily unavailable. ⚠ **WARNING** Risk of skidding if ABS and ESP® are malfunctioning If ABS and ESP® are malfunctioning, the wheels could lock when braking and ESP® cannot carry out vehicle stabilization. The steering capability and braking characteristics are thus severely impaired. The braking distance in an emergency braking situation can increase. In addition, other driving safety systems are switched off. ▶ Drive on carefully. ▶ Have ABS and ESP® checked immediately at a qualified specialist workshop. ▶ Carefully drive some gentle curves at above 19 mph (30 km/h) on a suitable stretch of road. ▶ If the display message does not go out, visit a qualified specialist workshop immediately. Drive carefully when doing so.
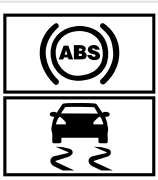 Inoperative See Operator's Manual	* ABS and ESP® are malfunctioning. Other driving systems and driving safety systems may also be malfunctioning. The brake system continues working with the normal effect. The braking distance can increase in emergency braking situations. ⚠ **WARNING** Risk of skidding if ABS and ESP® are malfunctioning If ABS and ESP® are malfunctioning, the wheels could lock when braking and ESP® cannot carry out vehicle stabilization. The steering capability and braking characteristics are thus severely impaired. The braking distance in an emergency braking situation can increase. In addition, other driving safety systems are switched off. ▶ Drive on carefully. ▶ Have ABS and ESP® checked immediately at a qualified specialist workshop. ▶ Continue driving carefully. ▶ Visit a qualified specialist workshop immediately.

Driving systems

Display messages	Possible causes/consequences and ▶ Solutions
120 km/h! Maximum Speed Exceeded	* You have exceeded the maximum permitted speed (only specific countries). ▶ Drive more slowly.
Cruise Control Inoperative	* Cruise control is malfunctioning. ▶ Visit a qualified specialist workshop.
Off	* Cruise control has been deactivated. If a warning tone also sounds, this means cruise control has deactivated itself automatically (→ page 141).
- - - mph	* Cruise control cannot be activated as not all activation conditions have been met. ▶ Observe the activation conditions of cruise control (→ page 142).
Active Distance Assist Inoperative	* The Active Distance Assist DISTRONIC is malfunctioning. Other driving systems and driving safety systems may also be malfunctioning. ▶ Visit a qualified specialist workshop.
Active Distance Assist Currently Unavailable See Operator's Manual	* The Active Distance Assist DISTRONIC is temporarily unavailable. The ambient conditions are outside the system limits (→ page 142). ▶ Continue driving. When the ambient conditions are within the system limits, the system will be available again.
Currently Unavailable Camera Dirty	* The camera view is reduced. Possible causes: • dirt on the windshield in the camera's field of vision • heavy precipitation or fog Driving systems and driving safety systems may be malfunctioning or temporarily unavailable. When the causes have been eliminated, the driving systems and driving safety systems will be available again. If the display message does not disappear: ▶ Stop in accordance with the traffic conditions. ▶ Clean the windshield. ▶ If necessary, visit a qualified specialist workshop.

Display messages	Possible causes/consequences and ▶ Solutions
 Currently Unavailable Radar Sensors Dirty	* The radar sensor system is malfunctioning. Possible causes: • dirt on the sensors • heavy precipitation • extended country drives without other traffic, e.g. in the desert The following systems may be affected: • Active Distance Assist DISTRONIC (→ page 142) • Blind Spot Assist(→ page 147) • Active Brake Assist (→ page 139) Driving systems and driving safety systems may be malfunctioning or temporarily unavailable. When the causes have been eliminated, the driving systems and driving safety systems will be available again. If the display message does not disappear: ▶ Stop in a safe location. ▶ Clean all sensors (→ page 183). ▶ Re-start the engine. ▶ If necessary, visit a qualified specialist workshop.
Active Distance Assist Now Available	* The Active Distance Assist DISTRONIC is operational again and can be activated (→ page 144).
HOLD Off	* The HOLD function has been deactivated because the vehicle is slipping or an activation condition has not been met. ▶ Re-activate the HOLD function later on or check the HOLD function's activation conditions (→ page 145).
Blind Spot Assist Inoperative	* Blind Spot Assist is malfunctioning (→ page 147). ▶ Visit a qualified specialist workshop.
Blind Spot Assist Trailer Not Monitored	* When you establish an electrical connection with the trailer, Blind Spot Assist will remain available but the area beside the trailer will not be monitored. The function of Blind Spot Assist may be restricted as a result (→ page 147). ▶ Press the left-hand Touch Control and acknowledge the display message.
Blind Spot Assist Currently Unavailable See Operator's Manual	* Blind Spot Assist is temporarily unavailable (→ page 147). The system limits have been reached (→ page 147). ▶ Continue driving. When the causes have been eliminated, the system will be available again. or ▶ If the display message does not go out, stop in a safe location and re-start the engine. ▶ If necessary, clean the rear bumper. If the bumper is very dirty, the sensors in the bumper may malfunction.
	* The camera view is reduced (→ page 150).

Display messages	Possible causes/consequences and ▶ Solutions
Active Lane Keeping Assist Camera View Restricted See Operator's Manual	Possible causes: • dirt on the windshield in the camera's field of vision • heavy precipitation or fog Driving systems and driving safety systems may be malfunctioning or temporarily unavailable. When the causes have been eliminated, the driving systems and driving safety systems will be available again. If the display message does not disappear: ▶ Stop in a safe location. ▶ Clean the windshield.
Active Lane Keeping Assist Inoperative	* Active Lane Keeping Assist is malfunctioning (→ page 150). ▶ Visit a qualified specialist workshop.
Active Lane Keeping Assist Currently Unavailable See Operator's Manual	* Active Lane Keeping Assist is temporarily unavailable (→ page 150). The ambient conditions are outside the system limits (→ page 150). ▶ Continue driving. When the ambient conditions are within the system limits, the system will be available again. If the display message does not disappear: ▶ Stop in a safe location. ▶ Clean the windshield.
 ATTENTION ASSIST Inoperative	* The ATTENTION ASSIST is malfunctioning. ▶ Visit a qualified specialist workshop.
 ATTENTION ASSIST: Take a Break!	* The ATTENTION ASSIST has detected fatigue or increasing inattentiveness on the driver's part (→ page 146). ▶ If necessary, take a break.

Engine

Display messages	Possible causes/consequences and ▶ Solutions
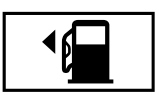 Fuel Level Low	* The fuel supplies have reached the reserve level. ▶ Refuel.
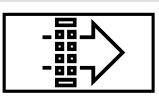 Replace Air Filter	* **Vehicles with a diesel engine:** The engine air filter is clogged and must be replaced. ▶ Visit a qualified specialist workshop.

Display messages	Possible causes/consequences and ▶ Solutions
	* The fan motor is defective. ▶ Without a high engine load, continue to the nearest qualified specialist workshop. Ensure that the coolant temperature display remains below 248 °F (120 °C).
Check Fuel Filter	* The water that has accumulated in the water separator has reached the maximum level. ▶ Drain the water separator (→ page 180).
Engine Oil Level Cannot Be Measured	* The electrical connection to the oil level sensor has been interrupted or the oil level sensor is defective. The engine oil level has fallen to the minimum level. ▶ Visit a qualified specialist workshop.
Engine Oil Pressure Stop Switch Off Engine	* Display message for certain engines only: The engine oil pressure is too low. ! **NOTE** Engine damage caused by driving with insufficient engine oil pressure ▶ Avoid driving with insufficient engine oil pressure. ▶ Stop in a safe location immediately. Do not continue driving. ▶ Consult a qualified specialist workshop.
Check Engine Oil Level (Add 1 Liter)	* Display message for certain engines only: The engine oil level has fallen to the minimum level. ! **NOTE** Engine damage caused by driving with insufficient engine oil ▶ Avoid long journeys with insufficient engine oil. ▶ Check the engine oil level at the next fuel stop. Top up engine oil (→ page 176). Observe the notes on engine oil (→ page 237).
Engine Oil Reduce Oil Level	* Display message for certain engines only: The engine oil level is too high. ! **NOTE** Engine damage caused by driving with excess engine oil ▶ Avoid long journeys with excess engine oil. ▶ Visit a qualified specialist workshop immediately and have the engine oil suctioned off.
	* Display message for certain engines only: The engine oil level is too low.

Display messages	Possible causes/consequences and ▶ Solutions
Engine Oil Level Low Stop Vehicle Turn Engine Off	**NOTE** Engine damage caused by driving with insufficient engine oil ▶ Avoid long journeys with insufficient engine oil. ▶ Stop in a safe location immediately. Do not continue driving. ▶ Switch off the engine. ▶ Check the engine oil level. Add engine oil (→ page 176). Observe the notes on engine oil (→ page 237).
 Check Engine Oil At Next Refueling	* The engine oil level has fallen to the minimum level. **NOTE** Engine damage caused by driving with insufficient engine oil ▶ Avoid long journeys with insufficient engine oil. ▶ Check the engine oil level at the next fuel stop. Top up engine oil (→ page 176). Observe the notes on engine oil (→ page 237).
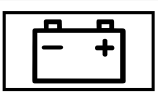 Stop Vehicle Leave Engine Running	* The battery's charge level is too low. ▶ Stop in a safe location immediately. Do not continue driving! ▶ Let the engine run. ▶ Do not continue driving until the display message goes out.
 Stop Vehicle See Operator's Manual	* The battery is no longer being charged and has reached an excessively low battery charge level. **NOTE** Possible engine damage if you continue driving ▶ Do not continue driving under any circumstances. ▶ Consult a qualified specialist workshop. ▶ Stop in a safe location immediately. Do not continue driving. ▶ Switch off the engine. ▶ Consult a qualified specialist workshop.
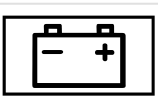 12 V Battery See Operator's Manual	* The engine is off and the battery charge level is too low. ▶ Switch off electrical consumers that are not required. ▶ Let the engine run for a few minutes or drive an extended distance. The battery is charged.
 See Operator's Manual	* The battery is no longer being charged. **NOTE** Possible engine damage if you continue driving ▶ Do not continue driving under any circumstances. ▶ Consult a qualified specialist workshop.

Display messages	Possible causes/consequences and ▶ Solutions
	▶ Stop in a safe location immediately and switch off the engine. ▶ Consult a qualified specialist workshop.
 Coolant Too Hot Stop Vehicle Turn Engine Off	* The coolant is too hot. ▶ Stop in a safe location immediately and switch off the engine. ⚠ **WARNING** Danger of burns when opening the hood If you open the hood when the engine has overheated or during a fire in the engine compartment, you could come into contact with hot gases or other escaping operating fluids. ▶ Before opening the hood, allow the engine to cool down. ▶ In the event of a fire in the engine compartment, keep the hood closed and call the fire service. ⚠ **WARNING** Risk of scalding from hot coolant The engine cooling system is pressurized, particularly when the engine is warm. If you open the cap, you could be scalded by hot coolant spraying out. ▶ Let the engine cool down before opening the cap. ▶ When opening the cap, wear protective gloves and safety glasses. ▶ Open the cap slowly to release pressure. ▶ Wait until the engine has cooled down. ▶ Ensure that the air supply to the engine radiator is not obstructed.
 Check Coolant Level See Operator's Manual	* The coolant level is too low. ⚠ **WARNING** Risk of scalding from hot coolant The engine cooling system is pressurized, particularly when the engine is warm. If you open the cap, you could be scalded by hot coolant spraying out. ▶ Let the engine cool down before opening the cap. ▶ When opening the cap, wear protective gloves and safety glasses. ▶ Open the cap slowly to release pressure. ! **NOTE** Engine damage due to insufficient coolant ▶ Avoid long journeys with insufficient coolant. ▶ Top up coolant (⟶ page 177).
Regeneration not possible	* Not all conditions have been met for regeneration of the diesel particulate filter . ▶ Continue driving as normal until all conditions have been met for regeneration of the diesel particulate filter.

Display messages	Possible causes/consequences and ▶ Solutions
	The load condition of the diesel particulate filter is over 50 % and the message still appears on the instrument cluster. ▶ Visit a qualified specialist workshop.

DEF (Diesel Exhaust Fluid)

Display messages	Possible causes/consequences and ▶ Solutions
 Refill Additive See Operator's Manual	* In addition, the yellow DEF indicator lamp lights up on the instrument cluster and a warning tone sounds. The DEF supply has fallen below the first warning threshold. ▶ Add at least 2.5 gal (9.5 l) of DEF (→ page 129). The DEF indicator lamp only disappears when the vehicle is stationary, at the latest after 20 seconds, as soon as you switch on the ignition or start the engine after topping up.
 Refill Additive Starts until Emerg. Op.: XXX See Operator's Manual	* In addition, the yellow DEF indicator lamp lights up and a warning tone sounds. The DEF supply has fallen below the reserve mark. After the message appears for the first time, the remaining DEF supply will last for approximately 1200 miles (1900 km). The engine can then only be started another 16 times. The number of remaining engine starts XX (16 to 1) is shown in the message every time the engine is started. ▶ Add at least 2.5 gal (9.5 l) of DEF (→ page 129). The DEF indicator lamp only disappears when the vehicle is stationary, at the latest after 20 seconds, as soon as you switch on the ignition or start the engine after topping up.
 Refill Additive Emergency Op.: XXX mph See Operator's Manual	* In addition, the yellow DEF indicator lamp lights up on the instrument cluster and a warning tone sounds. If the Refill Additive Emergency Op.: XXX mph See Operator's Manual display message is shown, you can only drive the vehicle at a maximum speed of 5 mph (8 km/h). ▶ Add at least 2.5 gal (9.5 l) of DEF (→ page 129). The DEF indicator lamp only disappears when the vehicle is stationary, at the latest after 20 seconds, as soon as you switch on the ignition or start the engine after refilling.
 Additive System Fault See Operator's Manual	* In addition, the yellow Check Engine warning lamp on the instrument cluster lights up and a warning tone sounds. The DEF reducing agent is contaminated, diluted or is not compliant with ISO 22241. ▶ Have the DEF supply tank cleaned and refilled at a qualified specialist workshop as soon as possible.
 Additive System Fault Starts until Emerg. Op.:	* In addition, the yellow Check Engine warning lamp on the instrument cluster lights up and a warning tone sounds. The DEF reducing agent is contaminated, diluted or is not compliant with ISO 22241.

Display messages	Possible causes/consequences and ▶ Solutions
XXX See Operator's Manual	The exhaust gas aftertreatment system is defective or an emissions-relevant malfunction has occurred. This malfunction or defect can damage the exhaust gas aftertreatment system. After the message appears for the first time, the engine can only be started another 10 times. The number of remaining engine starts XX (10 to 1) is shown in the message every time the engine is started. ▶ Visit a qualified specialist workshop immediately.
Additive System Fault Emergency Op.: XXX mph See Operator's Manual	* In addition, the yellow Check Engine warning lamp on the instrument cluster lights up and a warning tone sounds. You can only drive the vehicle at a maximum speed of 5 mph (8 km/h). ▶ Visit a qualified specialist workshop immediately.

Tires

Display messages	Possible causes/consequences and ▶ Solutions
Tire Pressure Monitor Inoperative No Wheel Sensors	* The installed wheels do not have suitable tire pressure sensors. The tire pressure monitor has been switched off. ▶ Install wheels with suitable tire pressure sensors.
Tire Press. Sen. Missing	* The tire pressure sensor signal is missing from one or more tires. No pressure value is displayed for the tire in question. ▶ Have the faulty tire pressure sensor replaced at a qualified specialist workshop.
Tire Press. Monitor Currently Unavailable	* There is interference from a powerful source of radio waves As a result, no signals from the tire pressure sensors are received. The tire pressure monitor is temporarily unavailable. ▶ Continue driving. As soon as the cause has been eliminated, the tire pressure monitor automatically switches on.
Warning Tire Malfunction	* The pressure in one or more tires suddenly falls. The wheel position is shown. ⚠ **WARNING** Risk of an accident from driving with a flat tire Flat tires are dangerous in the following ways: • The tires can overheat and cause a fire. • The driving characteristics, as well as steering and braking, may be greatly impaired. You could then lose control of the vehicle. ▶ Do not drive with a flat tire. ▶ Observe the notes on flat tires. Information about flat tires (→ page 188). ▶ Stop the vehicle in accordance with the traffic conditions.

Display messages	Possible causes/consequences and ▶ Solutions
	▶ Check the tires.
Check Tires	* The pressure in one or more tires has fallen significantly. The wheel position is shown. ⚠ **WARNING** Risk of an accident due to insufficient tire pressure Tire pressures that are too low pose the following hazards: • The tires may burst, especially as the load and vehicle speed increase. • The tires may wear excessively and/or unevenly, which may greatly impair tire traction. • The driving characteristics, as well as steering and braking, may be greatly impaired. You could then lose control of the vehicle. ▶ Observe the recommended tire pressure. ▶ Adjust the tire pressure if necessary. ▶ Stop in accordance with the traffic conditions. ▶ Check the tire pressure (→ page 204) and the tires.
Please Correct Tire Pressure	* The pressure in at least one tire is too low or the pressures of the individual tires deviate too much from each other. ▶ Check the tire pressure, and add air if necessary. ▶ When the tire pressure has been set correctly, re-start the tire pressure monitor (→ page 210).
Tire Pressure Monitor Inoperative	* The tire pressure monitor is malfunctioning. ▶ Visit a qualified specialist workshop.

Key

Display messages	Possible causes/consequences and ▶ Solutions
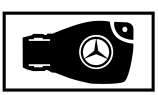 Don't Forget Your Key	* This message reminds you not to leave your key in the vehicle. ▶ Take the key with you when you get out of the vehicle.
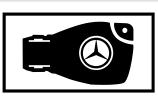 Place the Key in the Marked Space See Operator's Manual	* Key detection is malfunctioning. ▶ Change the key's position in the vehicle. ▶ Start the vehicle with the key in the slot(→ page 104).
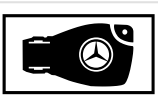	* The key is not detected and may no longer be in the vehicle. The key is no longer in the vehicle and you switch the engine off: • You can no longer start the engine.

Display messages	Possible causes/consequences and ▶ Solutions
Key Not Detected (red display message)	• You cannot lock the vehicle centrally. ▶ Ensure that the key is in the vehicle. If the key detection function has a malfunction due to a strong radio signal source, proceed as follows: ▶ Stop the vehicle immediately, paying attention to road and traffic conditions. ▶ Place the key in the slot for starting with the key (→ page 104).
 Key Not Detected (white display message)	* The key is currently not detected. ▶ Change the key's position in the vehicle. ▶ If the key is still not detected, start the engine with the key in the slot(→ page 104).
 Replace Key Battery	* The key's battery is flat. ▶ Change the battery (→ page 42).
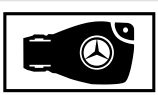 Obtain a New Key	* The key must be replaced. ▶ Visit a qualified specialist workshop.

Vehicle

Display messages	Possible causes/consequences and ▶ Solutions
 Check Washer Fluid	* Washer fluid level in washer reservoir has fallen below the minimum. ▶ Top up washer fluid (→ page 179).
	* At least one door is open. ▶ Close all the doors.
	* The hood is open. ⚠ **WARNING** Risk of accident if the engine hood is unlatched while driving An unlocked engine hood may open up when the vehicle is in motion and block your view. ▶ Never unlatch the engine hood while driving. ▶ Before every trip, ensure that the engine hood is latched. ▶ Stop in a safe location immediately. ▶ Close the hood.

Display messages	Possible causes/consequences and ▶ Solutions
 Inoperative See Operator's Manual	* Stationary heating is temporarily malfunctioning. ▶ When the vehicle is at a standstill in a horizontal position and the engine has cooled down: try to switch on the stationary heating four times, leaving a gap of several minutes between each attempt. ▶ If the stationary heating does not switch on: visit a qualified specialist workshop.
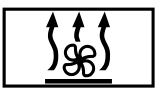 Inoperative Refuel Vehicle	* There is too little fuel in the fuel tank. The stationary heating cannot be switched on. ▶ Refuel the vehicle.
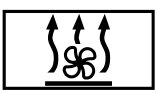 Inoperative Battery Low	* The on-board voltage is too low. The stationary heating has switched off. ▶ Drive an extended distance until the battery has been sufficiently charged again.
 Steering Malfunction Increased Physical Effort See Operator's Manual	* The steering power assistance is malfunctioning. ⚠ **WARNING** Risk of an accident due to altered steering characteristics If the power assistance of the steering fails partially or completely, you will need to use more force to steer. ▶ If safe steering is possible, drive on carefully. ▶ Visit or consult a qualified specialist workshop immediately. ▶ If safe steering is possible, drive on carefully. ▶ Visit or consult a qualified specialist workshop immediately.
 Steering Malfunction Stop Immediately See Operator's Manual	* The steering is malfunctioning. Steerability is heavily impaired. ⚠ **WARNING** Risk of accident if steering capability is impaired If the steering does not function as intended, the vehicle's operating safety is jeopardized. ▶ Pull over and stop the vehicle safely as soon as possible, paying attention to road and traffic conditions. Do not continue driving under any circumstances. ▶ Consult a qualified specialist workshop. ▶ Stop in a safe location immediately. Do not continue driving. ▶ Consult a qualified specialist workshop.
Shift to 'P' or 'N' to Start Engine	* You have attempted to start the engine in transmission position D or R. ▶ Shift the transmission to position P or N.
	* You have tried to shift from position D or N to position R. ▶ Press the brake pedal.

Display messages	Possible causes/consequences and ▶ Solutions
To Engage Transmiss. Position R First Depress the Brake	▶ Shift the transmission to position R.
Air Conditioning Malfunction See Operator's Manual	* The climate control system is functional, subject to temporary restrictions. The air quantity and fresh air supply are controlled automatically. ▶ Have the climate control system checked at a qualified specialist workshop.
Auxiliary Battery Malfunction	* The backup battery for the transmission is not being charged. ▶ Visit a qualified specialist workshop. ▶ Until then, always shift the transmission to position P manually before you switch off the engine. ▶ Before leaving the vehicle, apply the parking brake.
Reversing Not Possible Service Required	* The transmission is malfunctioning. It is no longer possible to shift to reverse gear. ▶ Visit a qualified specialist workshop.
Transmission Malfunction Stop	* The transmission is malfunctioning. The transmission automatically shifts to position N. ▶ Stop in a safe location immediately. ▶ Shift the transmission to position P. ▶ Consult a qualified specialist workshop.
⚠ Vehicle Operational Switch the Ignition Off Before Exiting	* You are about to exit the vehicle while it is ready to start. ▶ When you exit the vehicle, switch off the ignition and take the key with you. ▶ If you do not exit the vehicle, switch off the electrical consumers, e.g. the seat heating. Otherwise, the 12-Volt-battery may discharge and the vehicle can only be started using a booster battery (jump start).
Service Required Do Not Shift Gears Visit Dealer	* The transmission is malfunctioning. The transmission position can no longer be changed. ▶ If the transmission is in position D, visit a qualified specialist workshop, without changing the transmission position. ▶ For all other transmission positions, park the vehicle in a safe location. ▶ Inform a qualified specialist workshop or the breakdown service.
Only Shift to 'P' when Vehicle is Stationary	* The transmission can only be brought into position P if the vehicle is at a standstill.
N Permanently Active Risk of Rolling Away	* While the vehicle is rolling or driving, the transmission was shifted to position N. ▶ To stop, press the brake pedal and, when the vehicle is at a standstill, shift the transmission to position P. ▶ To continue driving, shift the transmission to position D or R.

Display messages	Possible causes/consequences and ▶ Solutions
Driver's Door Open & Transmission Not in P Risk of Vehicle Rolling Away	* The driver's door is not fully closed and the transmission is in position R, N or D. ▶ When parking the vehicle, shift the transmission to position P.
Apply Brake to Shift from 'P'	* You have tried to shift to a different transmission position from position P. ▶ Press the brake pedal.
Vehicle locating has been activated. Details: see manual or associated mobile app. or vehicle locating activated – see manual or mobile app.	* The vehicle features activated services from Mercedes PRO. Locating the vehicle may be possible as part of Mercedes PRO connect. ▶ Check the status of the activated services at http://mercedes.pro. ▶ Ask the vehicle owner for the details.
Step Not Extended See Operator's Manualor step not extended malfunction	* The electrical step is not, or only partially, extended. ▶ Ensure there is sufficient clearance for the electrical step. ▶ Open or close the sliding door again. ▶ If the electrical step does not completely extend again, slide it in manually (emergency release) (→ page 52). ▶ Inform passengers that the step is missing before they exit the vehicle.
Step Not Retracted See Operator's Manualor step not retracted malfunction	* The electrical step is not, or only partially, retracted. ▶ Ensure there is sufficient clearance for the electrical step. ▶ Open or close the sliding door again. ▶ If the electrical step does not completely retract again, slide it in manually (emergency release) (→ page 52).

Lights

Display messages	Possible causes/consequences and ▶ Solutions
Adaptive Highbeam Assist Camera View Restricted See Operator's Manual	* The camera view is reduced. Possible causes: • Dirt on the windshield in the camera's field of vision • Heavy precipitation or fog Driving systems and driving safety systems may be malfunctioning or temporarily unavailable. When the causes have been eliminated, the driving systems and driving safety systems are available again. If the display message does not go out: ▶ Stop in a safe location. ▶ Clean the windshield.

Display messages	Possible causes/consequences and ▶ Solutions
Adaptive Highbeam Assist Currently Unavailable See Operator's Manual	* Adaptive Highbeam Assist is temporarily unavailable. The system limits have been reached (→ page 81). ▶ Continue driving. When the causes have been eliminated, the system will be available again. The display message Adaptive Highbeam Assist Now Available appears.
Adaptive Highbeam Assist Inoperative	* Adaptive Highbeam Assist is malfunctioning. ▶ Visit a qualified specialist workshop.
Switch On Headlamps	* You are driving without a low beam. ▶ Turn the light switch to position [≡D]. or ▶ Turn the light switch to the [AUTO] position.
Switch Off Lights	* You are leaving the vehicle and the light is still switched on. ▶ Turn the light switch to position [AUTO].
Auto Lamp Function Inoperative	* The light sensor is malfunctioning. ▶ Visit a qualified specialist workshop.
Malfunction See Operator's Manual	* The exterior lighting is malfunctioning. ▶ Visit a qualified specialist workshop. **Vehicles with trailer hitch**: a fuse may have blown. ▶ Stop in accordance with the traffic conditions. ▶ Check the fuses, and replace them if necessary(→ page 199).
Check Left Low Beam (example)	* The bulb in question is faulty. ▶ Visit a qualified specialist workshop. or ▶ Check whether changing the bulb is permitted.

Indicator and warning lamps

Overview of warning and indicator lamps

When the ignition is switched on, many systems perform a self-test. Some warning and indicator lamps may switch on or flash temporarily during this time. This behavior is no cause for alarm. These warning and indicator lamps only signal a malfunction if they light up or flash, once the engine has been started or the vehicle is in operation.

Warning and indicator lamps:

[≡D]	Low beam (→ page 79)
[≻DOC≺]	Parking light (→ page 79)
[≡D]	High beam (→ page 80)
[⇦] [⇨]	Turn signal (→ page 80)
[0≠]	Rear fog light (→ page 79)
[🙍]	Safety belt not fastened (→ page 272)
[BRAKE] and [(!)]	USA: Brakes (red) (→ page 267)

	Canada: Brakes (red) (→ page 267)
	Brakes (yellow) (→ page 267)
	ABS malfunctioning (→ page 267)
LOW RANGE	Off-road gear
	ESP ®(→ page 267)
	ESP® OFF (→ page 267)
	Active Brake Assist deactivated (→ page 139)
PARK and	USA: Electric parking brake applied (red) (→ page 267) (→ page 267)
	Canada: Electric parking brake applied (red) (→ page 267) (→ page 267)
	Electric parking brake (yellow) (→ page 267) (→ page 267)
	Power-assisted steering malfunctioning (→ page 273)
	Electrical malfunction (→ page 273)
	Restraint system (→ page 267)
	Check Engine (→ page 273)
	Fuel reserve with fuel filler flap location indicator (→ page 273)
	Coolant too hot/cold (→ page 273)
	Distance warning (→ page 273)
	Preglow
	Tire pressure monitor

Safety systems

Warning/indicator lamp	Possible causes/consequences and ▶ Solutions
and PARK Electric parking brake applied red indicator lamp (USA) does not light up Electric parking brake applied red indicator lamp (Canada) does not light up Electric parking brake malfunctioning yellow indicator lamp lights up	**Vehicles with electric parking brake:** the electric parking brake red indicator lamp does not light up. The electric parking brake yellow indicator lamp lights up. Meaning of the indicator lamps: • The red indicator lamp does not light up: the electric parking brake has been released. • The yellow indicator lamp lights up: the electric parking brake is malfunctioning. ▶ Observe the messages on the multifunction display. ▶ Switch the ignition off and back on. ▶ If the malfunction message persists, visit a qualified specialist workshop. ▶ Park the vehicle only on level ground and secure it against rolling away (→ page 134).
and	**Vehicles with electric parking brake:** the red and yellow electric parking brake indicator lamps light up.

Warning/indicator lamp	Possible causes/consequences and ▶ Solutions
PARK Red electric parking brake applied indicator lamp (USA) lights up Red electric parking brake applied indicator lamp (Canada) lights up Electric parking brake malfunctioning yellow indicator lamp lights up	Meaning of the indicator lamps: • The red electric parking brake indicator lamp lights up: the electric parking brake has been applied. • The yellow electric parking brake indicator lamp lights up: the electric parking brake is malfunctioning. ▶ Observe the messages on the multifunction display. ▶ Switch the ignition off and back on. ▶ If the malfunction message persists, visit a qualified specialist workshop. ▶ If it is not possible to release the electric parking brake, do not drive the vehicle.
and PARK Red electric parking brake applied indicator lamp (USA) flashes Red electric parking brake applied indicator lamp (Canada) flashes Electric parking brake malfunctioning yellow indicator lamp lights up	**Vehicles with electric parking brake:** the red electric parking brake indicator lamp flashes. The electric parking brake yellow indicator lamp lights up. Meaning of the indicator lamps: • The red electric parking brake indicator lamp flashes: the activation status of the electric parking brake is unknown. • The yellow electric parking brake indicator lamp lights up: the electric parking brake is malfunctioning. ▶ Observe the messages on the multifunction display. ▶ Switch the ignition off and back on. ▶ Engage and disengage the electric parking brake using the switch while depressing the brake pedal. ▶ If the malfunction message persists, park the vehicle on level ground and secure it against rolling away (→ page 134). ▶ Consult a qualified specialist workshop. ▶ When the red indicator lamp flashes, the vehicle must not be driven as the brake system may overheat.
and	**Vehicles with electric parking brake:** the electric parking brake red indicator lamp lights up. The electric parking brake yellow indicator lamp does not light up. Meaning of the indicator lamps: • The electric parking brake red indicator lamp lights up: the electric parking brake has been applied.

Warning/indicator lamp	Possible causes/consequences and ▶ Solutions
PARK Red electric parking brake applied indicator lamp (USA) lights up Red electric parking brake applied indicator lamp (Canada) lights up The electric parking brake malfunctioning yellow indicator lamp does not light up	• The electric parking brake yellow indicator lamp does not light up: there are no malfunctions with the electric parking brake. ▶ Do not drive the vehicle if the electric parking brake has been applied.
and PARK Red parking brake applied indicator lamp (USA) lights up Red parking brake applied indicator lamp (Canada) lights up	**Vehicles with manual parking brake:** the red parking brake indicator lamp lights up. Meaning of the indicator lamp: • The red parking brake indicator lamp lights up: the parking brake has been applied. ▶ Do not drive the vehicle if the parking brake has been applied.
Brake system warning lamp (yellow)	The brake system yellow warning lamp lights up while the engine is on. ⚠ **WARNING** Risk of an accident due to a brake system malfunction If the brake system is malfunctioning, braking characteristics may be impaired. ▶ Drive on carefully. ▶ Have the brake system checked immediately at a qualified specialist workshop.

Warning/indicator lamp	Possible causes/consequences and ▶ Solutions
	▶ Drive carefully at an adjusted speed and at a sufficient distance from the vehicle in front. ▶ If the multifunction display shows a display message, comply with it. ▶ Visit a qualified specialist workshop.
 and Brake warning lamp (red) (USA) Brake warning lamp (red) (Canada)	The brake system red warning lamp lights up while the engine is on. Possible causes: • The brake force boosting is malfunctioning. • The EBD (electronic brakeforce distribution) is malfunctioning. • There is not enough brake fluid in the brake fluid reservoir. ⚠ **WARNING** Risk of accident and injury if brake force boosting is malfunctioning If brake force boosting is malfunctioning, increased brake pedal force may be necessary for braking. The braking characteristics may be impaired. The braking distance can increase in emergency braking situations. ▶ Stop in a safe location immediately. Do not continue driving. ▶ Consult a qualified specialist workshop. ⚠ **WARNING** Risk of an accident if the EBD (electronic brake force distribution) malfunctions If the EBD malfunctions, the wheels may lock during braking. The braking characteristics may be impaired. The braking distance can increase in emergency situations. ▶ Stop in a safe location immediately. Do not continue driving. ▶ Consult a qualified specialist workshop. ⚠ **WARNING** Risk of an accident due to low brake fluid level If the brake fluid level is too low, the braking effect and the braking characteristics may be impaired. ▶ Pull over and stop the vehicle safely as soon as possible, paying attention to road and traffic conditions. Do not continue driving under any circumstances. ▶ Consult a qualified specialist workshop. ▶ Do not add brake fluid. ▶ Stop the vehicle immediately, paying attention to road and traffic conditions. Do not continue driving. ▶ Consult a qualified specialist workshop.
 Restraint system warning lamp	The restraint system red warning lamp is on while the engine is on. The restraint system is malfunctioning.

Warning/indicator lamp	Possible causes/consequences and ▶ Solutions
	⚠ **WARNING** Risk of injury due to malfunctions in the restraint system If the restraint system is malfunctioning, restraint system components may be triggered unintentionally or may not deploy as intended during an accident. This may affect the Emergency Tensioning Devices or airbags, for example. ▶ Have the restraint system checked and repaired immediately at a qualified specialist workshop. ▶ Drive on carefully. ▶ Observe the messages on the multifunction display. ▶ Visit a qualified specialist workshop immediately.
 ESP® warning lamp lights up	The ESP® yellow warning lamp lights up while the engine is on. ESP® is malfunctioning. Other driving systems and driving safety systems may also be malfunctioning. ⚠ **WARNING** Risk of skidding if ESP® is malfunctioning If ESP® is malfunctioning, ESP® cannot carry out vehicle stabilization. In addition, other driving safety systems are switched off. ▶ Drive on carefully. ▶ Have ESP® checked at a qualified specialist workshop. ▶ Continue driving carefully. ▶ Read the messages on the multifunction display. ▶ Visit a qualified specialist workshop.
 ESP® warning lamp flashes	The ESP® yellow warning lamp flashes during the trip. ESP® intervenes (→ page 138). ▶ Adapt your driving style to the weather and road conditions.
  ESP® OFF warning lamp	The ESP® OFF yellow warning lamp lights up while the engine is on. ESP® has been switched off. ⚠ **WARNING** Risk of skidding when driving with ESP® deactivated If ESP® is deactivated, ESP® cannot carry out vehicle stabilization. The availability of further driving safety systems is also limited. ▶ Drive on carefully. ▶ Only deactivate ESP® for as long as the situation requires. If ESP® cannot be activated, ESP® is malfunctioning. ▶ Have ESP® checked immediately at a qualified specialist workshop.

Warning/indicator lamp	Possible causes/consequences and ▶ Solutions
	▶ Comply with instructions to switch ESP® off (→ page 138).
ABS warning lamp	The ABS yellow warning lamp lights up while the engine is on. ABS is malfunctioning. If an additional warning tone sounds, this means the EBD is malfunctioning. Other driving systems and driving safety systems may also be malfunctioning. ⚠ **WARNING** There is risk of skidding if EBD or ABS is malfunctioning If EBD or ABS is malfunctioning, the wheels could lock when braking The steering capability and braking characteristics are thus severely impaired. The braking distance in an emergency braking situation can increase. In addition, other driving safety systems are switched off. ▶ Drive on carefully. ▶ Have the brake system checked immediately at a qualified specialist workshop. ▶ Continue driving carefully. ▶ Read the messages on the multifunction display. ▶ Visit a qualified specialist workshop.

Seat belt

Warning/indicator lamp	Possible causes/consequences and ▶ Solutions
Seat belt warning lamp flashes	The red seat belt warning lamp flashes and an intermittent warning tone sounds. The driver or co-driver does not have their belt on during the trip (speeds above 15 mph (25 km/h)). ▶ Put on the seat belt (→ page 31). There are objects on the front-passenger seat. ▶ Remove the objects from the front-passenger seat.
Seat belt warning lamp lights up	The seat belt red warning lamp lights up once the engine has started. A warning tone may also sound. When the vehicle is stationary: The seat belt warning lamp reminds drivers and front-passenger to put on their seat belt. ▶ Putting on the seat belt (→ page 31). Objects on the front-passenger seat may prevent the seat belt warning lamp from going out.

Driving systems

Warning/indicator lamp	Possible causes/consequences and ▶ Solutions
Distance warning lamp	The red distance warning lamp lights up while you are driving and a warning tone sounds. You are approaching an obstacle at too high a speed. ▶ Be ready to apply the brakes immediately. ▶ Increase the distance.

Vehicle

Warning/indicator lamp	Possible causes/consequences and ▶ Solutions
Power steering system warning lamp	The red power steering system warning lamp lights up while the engine is running. The power steering assistance or the steering itself is malfunctioning. ⚠ **WARNING** Risk of accident if steering capability is impaired If the steering no longer functions as intended, the vehicle's operating safety is jeopardized. ▶ Consult a qualified specialist workshop. ▶ Read the messages on the multifunction display.

Engine

Warning/indicator lamp	Possible causes/consequences and ▶ Solutions
Coolant warning lamp	The red coolant warning lamp lights up while the engine is running. Possible causes: • temperature sensor malfunctioning • coolant level too low • air supply to the engine radiator obstructed • engine radiator fan faulty If a warning tone also sounds, the coolant has exceeded the temperature of 248 °F (120 °C). ⚠ **WARNING** Danger of burns when opening the hood If you open the hood when the engine has overheated or during a fire in the engine compartment, you could come into contact with hot gases or other escaping operating fluids. ▶ Before opening the hood, allow the engine to cool down. ▶ In the event of a fire in the engine compartment, keep the hood closed and call the fire service.

Warning/indicator lamp	Possible causes/consequences and ▶ Solutions
	▶ Stop immediately in accordance with the traffic conditions and switch off the engine. Do not continue driving. ▶ Observe the messages on the multifunction display. If the coolant temperature display is at the lower end of the temperature scale: ▶ Consult a qualified specialist workshop. Otherwise: ▶ Leave the vehicle and keep a safe distance from the vehicle until the engine has cooled down. ▶ Check the coolant level(→ page 177). ▶ Ensure that the air supply to the engine radiator is not obstructed. ▶ Without subjecting the engine to excessive strain, continue to the nearest qualified specialist workshop. Ensure that the coolant temperature display remains below 248 °F (120 °C).
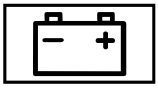 Electrical malfunction warning lamp	The electrical malfunction red warning lamp lights up. A malfunction has occurred in the electrics. ▶ Read the messages on the multifunction display.
 Fuel reserve warning lamp	The fuel reserve yellow warning lamp lights up while the engine is on. The fuel supplies have reached the reserve level. ▶ Refuel.
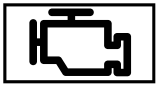 Engine diagnosis warning lamp	The yellow Check Engine warning lamp lights up while the engine is on. A malfunction has occurred in the engine, the exhaust system or the fuel system. The emissions limit value may have been exceeded and the engine may be running in emergency operation mode. ▶ Have the vehicle checked as soon as possible at a qualified specialist workshop.

Tires

Warning/indicator lamp	Possible causes/consequences and ▶ Solutions
 Tire pressure monitoring system warning lamp flashes	The yellow tire pressure monitoring system warning lamp (pressure loss/malfunction) flashes for roughly one minute and then lights up permanently. The tire pressure monitoring system is malfunctioning.

Warning/indicator lamp	Possible causes/consequences and ▶ Solutions
	⚠ **WARNING** There is a risk of an accident if the tire pressure monitoring system is malfunctioning If the tire pressure monitoring system is malfunctioning, it is not able to issue a warning if there is pressure loss in one or more of the tires. Underinflated tires may, for example, impair the driving, steering and braking characteristics. ▶ Have the tire pressure monitoring system checked at a qualified specialist workshop. ▶ Visit a qualified specialist workshop.
 Tire pressure monitoring system warning lamp lights up	The tire pressure monitor yellow warning lamp (pressure loss/malfunction) lights up. The tire pressure monitor has detected a tire pressure loss in at least one tire. ⚠ **WARNING** Risk of an accident due to insufficient tire pressure Tire pressures that are too low pose the following hazards: • The tires may burst, especially as the load and vehicle speed increase. • The tires may wear excessively and/or unevenly, which may greatly impair tire traction. • The driving characteristics, as well as steering and braking, may be greatly impaired. You could then lose control of the vehicle. ▶ Observe the recommended tire pressure. ▶ Adjust the tire pressure if necessary. ▶ Stop the vehicle in a safe location. ▶ Check the tire pressure and the tires.

1, 2, 3 ...

3-zone automatic climate control (control panel) 95
12 V socket
see Socket (12 V)
115 V socket
see Socket (115 V)
360° Camera
Care 183

A

ABS (Anti-lock Braking System) 137
Acceleration
see Using kickdown
Active Brake Assist 139
Function/notes 139
Setting 141
Active Distance Assist DISTRONIC 142
Calling up a speed 144
Function 142
Increasing/decreasing speed 144
Requirements 144
Steering wheel buttons 144
Storing a speed 144
Switching off/deactivating 144
Switching on/activating 144
System limitations 142
Active Lane Keeping Assist 150
Activating/deactivating 151
Function 150
System limitations 150
Trailer operation 150
Adaptive cruise control
see Active Distance Assist DISTRONIC
Adaptive Highbeam Assist
Function 81
Switching on/off 81
Add-on equipment 19
Add-on equipment guidelines 19
Additional turn signal light (all-wheel drive vehicles) 85
Additive 237
DEF 127, 236
Engine oil 237
Additives
Fuel 234
Additives (DEF)
see DEF
Additives (engine oil)
see Additive
Additives (fuel)
see Fuel
ADR (working speed control)
Adjusting 151
Function 151
Switching on/off 151
After-sales service center
see ASSYST PLUS
Air bag
Reduced protection 33
Air nozzles
see Air vents
Air vents 98, 99
adjusting (front) 98
Adjusting (roof) 99
Rear passenger compartment 99
Airbag 32
Activation 29
Front airbag (driver, front passenger) 32
Installation locations 32
Overview 32
Protection 32
Side airbag 32
Window curtain airbag 32
Alarm system
see ATA (Anti-Theft Alarm system)
Alertness assistant
see ATTENTION ASSIST
All-wheel drive
Engaging 118
Engaging/disengaging 119
LOW range 119
Notes 118
Animals
Pets in the vehicle 40
Anti-lock braking system
see ABS (Anti-lock Braking System)
Anti-skid chains
see Snow chains
Anti-theft Alarm system
see ATA (Anti-Theft Alarm system)
Anti-theft protection
Immobilizer 55
Anti-theft protection
see ATA (Anti-Theft Alarm system)

Ashtrays
In the windshield stowage compartment ... 74
ASR (acceleration skid control) ... 137
Assistance graphic (on-board computer) ... 161
ASSYST PLUS ... 173
Battery disconnection periods ... 173
Displaying the service due date ... 173
Function/notes ... 173
Regular maintenance work ... 173
Special service requirements ... 173
ATA (Anti-Theft Alarm system) ... 56
Activating/deactivating the interior motion sensor ... 57
Function ... 56
Interior motion sensor function ... 57
Stopping the alarm ... 56
Switching the tow-away alarm on/off ... 57
Tow-away alarm function ... 56
Attachments ... 19
ATTENTION ASSIST ... 146
Activating/deactivating ... 147
Function ... 146
System limitations ... 146
Authorized workshop
see Qualified specialist workshop
Automatic distance control
see Active Distance Assist DISTRONIC
Automatic driving lights ... 79
Automatic transmission
DIRECT SELECT lever ... 115
Engaging drive position ... 117
Engaging neutral ... 116
Engaging reverse gear ... 116
Kickdown ... 118
Restricting the shift range ... 117
Selecting park position ... 116
Transmission position display ... 115
Transmission positions ... 115
Auxiliary heating ... 99
Function ... 99
Axle load ... 231

B

Back support
see Lumbar support (4-way)
BAS (Brake Assist System) ... 137
Battery
Charging ... 190
Charging a vehicle battery ... 190
Disconnecting the auxiliary battery in the engine compartment ... 194
Disconnecting the starter battery ... 193
Jump-starting (vehicle) ... 190
Key ... 42
Notes (vehicle) ... 189
Removing or installing the starter battery ... 193
Starter battery ... 192
Battery main switch
Notes ... 114
Switching the power supply on/off ... 114
Belt
see Seat belt
Blind Spot Assist ... 147
Activating/deactivating ... 148
Function ... 147
Rear Cross Traffic Alert ... 148
System limitations ... 147
Bottle holder ... 74
Brake
ABS (Anti-lock Braking System) ... 137
Active Brake Assist ... 139
BAS (Brake Assist System) ... 137
Braking with parking brake: ... 108
Breaking-in notes ... 105
Downhill gradient ... 108
Driving tips ... 105
EBD (electronic brake force distribution) ... 139
Heavy and light loads ... 108
HOLD function ... 145
New brake discs and brake pads/linings ... 108
Restricted braking effect (salt-treated roads) ... 105
Wet road surfaces ... 108
Brake Assist System
see BAS (Brake Assist System)
Brake Assistance
see BAS (Brake Assist System)
Brake fluid
Notes ... 239
Brake force distribution
EBD (electronic brake force distribution) ... 139
Brakes
New/replaced brakepads/brake discs ... 105

Breakdown
Assistance overview 16
Changing a wheel 221
Roadside Assistance 21
Tow starting 199
Towing away 196
Transporting the vehicle 197

Breakdown
see Flat tire

Breaking-in notes 105

Bulbs
Reversing light 87

Buttons
Steering wheel 159

C

Car wash
see Care

Car wash (care) 181

Care 185
Car wash 181
Carpet 185
Display 185
Exterior lighting 183
Headliner 185
Matte finish 182
Paint 182
Plastic trim 185
Power washer 181
Real wood/trim elements 185
Rear view camera/360° Camera 183
Seat belt 185
Seat cover 185
Sensors 183
Tailpipes 183
Trailer hitch 183
Washing by hand 182
Wheels/rims 183
Windows 183
Wiper blades 183

Cargo compartment lighting
Motion detector 83

Cargo compartment ventilation
Deactivating 102
Setting 102

Cargo tie-down point 168

Cargo tie-down points
Information 245

Carpet (care) 185

Change bulbs
Additional turn signal light (all-wheel drive vehicles) 85

Changing a bulb
see Changing bulbs

Changing a wheel
Lowering the vehicle 224
Preparing 221
Raising the vehicle 221
Removing a wheel 223

Changing address 21

Changing bulbs 83
High beam 84
Indicator (front) 84
Interior lamps (rear compartment) 88
License plate lamp 86
Light bulb types halogen headlamps 84
Low beam 84
Notes 83
Tail lamp bulb types (Cargo Van and Passenger Van) 85
Tail lamp bulb types (chassis) 87
Turn signal light (rear) (chassis) 87

Changing lamps
see Changing bulbs

Changing owner 21

Characteristics of the tire 215

Charging
Battery 190
Mobile phone (wireless) 77

Child safety lock (doors) 39

Child seat
front-passenger seat (notes) 38
front-passenger seat (rearward-facing/forward-facing) 38
LATCH-type (ISOFIX) (installing) 36
LATCH-type (ISOFIX) (notes) 36
Notes on the safe transportation of children 34
Rearward-facing child restraint system (Information) 38
Top Tether 37

Children
Notes on safe transportation 34
Special seat belt retractor 35

Cigarette lighter 75

Cleaning
see Care

Cleaning water drain valve of the air intake box 179

Climate control
Activating/deactivating 95
Adjusting rear-compartment heating 96
Air distribution settings 97
automatically controlling (rear passenger compartment) 97
Auxiliary heating 99
Cargo compartment ventilation 102
Clearing fogged up windows 97
Control panel for 3-zone automatic climate control 95
Control panel for dual-zone automatic climate control 94
Controlling automatically 96
Hot-water auxiliary heater 100
Refrigerant 241
Setting the air distribution 97
Switching air-recirculation mode on/off 98
Switching synchronization function on/off (control panel) 97
Switching the A/C function on/off 96
Switching the rear window defroster on/off 98
Switching the windshield heater on/off 98
Ventilating the vehicle (convenience opening) 54
Ventilation nozzles at front 98
Ventilation nozzles in the roof 99
Ventilation nozzles, rear passenger compartment 99

Cockpit (overview) 6

Combination switch
see High beam
see High-beam flasher
see Indicator

Computer
see On-board computer

Convenience closing 54

Convenience opening 54

Conversions 19

Coolant
Filling capacities 240

Coolant (engine)
Checking level 177
Notes 239

Copyright
License 27
Trademarks 27

Cornering light 80

Crosswind Assist
Function/notes 138

Cruise control 141
Activating 142
Buttons 142
Calling up a speed 142
Deactivating 142
Function 141
Requirements 142
Selecting 142
Setting the speed 142
Storing a speed 142
System limitations 141

Customer Assistance Center (CAC) 24

Customer Relations Department 24

D

Dashboard
see Cockpit (overview)

Dashboard lighting
see Instrument lighting

Data recording (vehicle) 25

Dealership
see Qualified specialist workshop

Declaration of conformity
Vehicle components which receive and/or transmit radio waves 22

DEF 127, 236
Additive 127, 236
Displaying the fill level 128
Filling capacity 237
Purity 127, 236
Range display 128
Topping up 129

Definitions (tires and loading) 216

Diagnostics connection 22

Diesel
Low outside temperatures 234
Notes 234

Diesel particulate filter
Automatic regeneration 114
Notes 114

Digital speedometer 162

Dimming the inside rearview mirror 91

DIRECT SELECT lever 115
Engaging drive position 117
Engaging neutral 116
Engaging park position automatically 116
Engaging reverse gear 116

Function 115
Selecting park position 116

Direction indicator
see Indicator

Display (care) 185

Display (on-board computer) 160

Display message 247
Calling up (on-board computer) 247
Notes 247

Display messages
..... 256
--- mph 253
12 V Battery See Operator's Manual 257
Active Brake Assist Functions Currently Limited See Operator's Manual 250
Active Brake Assist Functions Limited See Operator's Manual 250
Active Distance Assist Currently Unavailable See Operator's Manual 253
Active Distance Assist Inoperative ... 253
Active Distance Assist Now Available 254
Active Lane Keeping Assist Camera View Restricted See Operator's Manual 254
Active Lane Keeping Assist Currently Unavailable See Operator's Manual 255
Active Lane Keeping Assist Inoperative 255
Adaptive Highbeam Assist Camera View Restricted See Operator's Manual 265
Adaptive Highbeam Assist Currently Unavailable See Operator's Manual 266
Adaptive Highbeam Assist Inoperative 266
Additive System Fault Emergency Op.: XXX mph See Operator's Manual 260
Additive System Fault See Operator's Manual 259
Additive System Fault Starts until Emerg. Op.: XXX See Operator's Manual 259
Air Conditioning Malfunction See Operator's Manual 264
Apply Brake to Shift from 'P' 265
ATTENTION ASSIST Inoperative 255
ATTENTION ASSIST: Take a Break! 255
Auto Lamp Function Inoperative 266
Auxiliary Battery Malfunction 264
Blind Spot Assist Currently Unavailable See Operator's Manual 254
Blind Spot Assist Inoperative 254
Blind Spot Assist Trailer Not Monitored 254
Check Brake Fluid Level 249
Check Brake Pads See Operator's Manual 249
Check Coolant Level See Operator's Manual 258
Check Engine Oil At Next Refueling 257
Check Engine Oil Level (Add 1 Liter) 256
Check Fuel Filter 256
Check Left Low Beam (example) 266
Check Tires 261
Check Washer Fluid 262
Coolant Too Hot Stop Vehicle Turn Engine Off 258
Cruise Control Inoperative 253
Currently Unavailable Camera Dirty 253
Currently Unavailable Radar Sensors Dirty 254

Currently Unavailable See Operator's Manual 252
Currently Unavailable See Operator's Manual 251
Don't Forget Your Key 261
Driver's Door Open & Transmission Not in P Risk of Vehicle Rolling Away 265
Engine Oil Level Cannot Be Measured 256
Engine Oil Level Low Stop Vehicle Turn Engine Off 256
Engine Oil Pressure Stop Switch Off Engine 256
Engine Oil Reduce Oil Level 256
Front Left Malfunction Service Required (example) 247
Fuel Level Low 255
Incline Too Steep See Operator's Manual 248
Inoperative Battery Low 263
Inoperative Refuel Vehicle 263
Inoperative See Operator's Manual 252
Inoperative See Operator's Manual 251
EBD Inoperative See Operator's Manual 251
Inoperative See Operator’s Manual 263
Key Not Detected (red display message) 261
Key Not Detected (white display message) 262
Left Side Curtain Airbag Malfunction Service Required (example) 247
Malfunction See Operator’s Manual 266
120 km/h Maximum Speed Exceeded 253
N Permanently Active Risk of Rolling Away 264
Obtain a New Key 262
Off 253
HOLD Off 254
Only Shift to 'P' when Vehicle is Stationary 264
Parking Brake Inoperative 248
Parking Brake See Operator's Manual 249
Place the Key in the Marked Space See Operator's Manual 261
Please Correct Tire Pressure 261
Radar Sensors Dirty See Operator's Manual 250
Refill Additive Emergency Op.: XXX mph See Operator's Manual 259
Refill Additive See Operator's Manual 259
Refill Additive Starts until Emerg. Op.: XXX See Operator's Manual 259
Regeneration not possible 258
Replace Air Filter 255
Replace Key Battery 262
Reversing Not Possible Service Required 264
See Operator's Manual 257
Service Required Do Not Shift Gears Visit Dealer 264
Shift to 'P' or 'N' to Start Engine 263
SOS NOT READY 250
SRS Malfunction Service Required 248
Steering Malfunction Increased Physical Effort See Operator's Manual 263
Steering Malfunction Stop Immediately See Operator's Manual 263
Step Not Extended See Operator's Manual or step not extended malfunction 265
Stop Vehicle Leave Engine Running 257

Stop Vehicle See Operator's Manual 257
Switch Off Lights 266
Switch On Headlamps 266
Tire Press. Monitor Currently Unavailable 260
Tire Press. Sen. Missing 260
Tire Pressure Monitor Inoperative 261
Tire Pressure Monitor Inoperative No Wheel Sensors 260
To Engage Transmiss. Position R First Depress the Brake 263
Transmission Malfunction Stop 264
Vehicle locating has been activated. Details: see manual or associated mobile app. or vehicle locating activated – see manual or mobile app. 265
Vehicle Operational Switch the Ignition Off Before Exiting 264
Warning Tire Malfunction 260

Display range (trip menu) 162
Display total distance (trip menu) 162
Distance control
see Active Distance Assist DISTRONIC
Distance recorder
see Trip distance
DISTRONIC
see Active Distance Assist DISTRONIC
Door
Locking (emergency key) 45
Unlocking (emergency key) 45
Door control panel 14
DOT, Tire Identification Number (TIN) 214
Drinking and driving 105
Driver's seat
see Seats
Driving characteristics (unusual) 202
Driving instructions
Foreign trip (information) 107
Driving light
see Automatic driving lights
Driving notes
Transport by rail 108
Driving Safety System
ABS (Anti-lock Braking System) 137
ASR (acceleration skid control) 137
BAS (Brake Assist System) 137
EBD (electronic brake force distribution) 139
ESP® Crosswind Assist 138
ESP® trailer stabilization 139
Overview 137
Radar sensors 136
Responsibility 136
Driving safety system
see Active Brake Assist
see ESP® (Electronic Stability Program)
Driving system
see Active Distance Assist DISTRONIC
see Active Lane Keeping Assist
see ATTENTION ASSIST
see Blind Spot Assist
see Cruise control
see HOLD function
see Lane Keeping Assist
Driving tips
Brake subject to load 108
Braking 108
Breaking-in notes 105
Downhill gradient 108
Drinking and driving 105
Driving abroad (symmetrical low beam) 79
Driving in winter 110
Driving off-road 110
Driving on flooded roads 109
Driving on wet roads 109
General driving tips 105
Hydroplaning 109
New brake discs and brake pads/linings 108
Parking brake 108
Wet road surfaces 108
Drowsiness detection
see ATTENTION ASSIST
DSR (Downhill Speed Regulation)
Activating/deactivating 120
Notes 120
Dual-zone automatic climate control (control panel) 94

E

E10 234
EBD (electronic brake force distribution) 139

ECO display
Function ... 113
Resetting ... 163
Electric parking brake ... 134
Applying automatically ... 134
Applying or releasing manually ... 135
Emergency braking ... 136
Notes ... 134
Releasing automatically ... 135
Electric sliding door
Function ... 46
Opening with button ... 47
Opening with the door handle ... 48
Opening/closing with the key ... 48
Programming the key ... 48
Resetting ... 49
Unlocking manually ... 49
Electrical closing assist
Notes ... 46
Electrical consumption
Key ... 42
Electrical fuses
see Fuses
Electrical step
Emergency release ... 52
Extending/retracting ... 52
Function ... 52
Obstacle ... 52
Preventing extending ... 52
Electronic Stability Program
see ESP® (Electronic Stability Program)
Electronics ... 230
Emergency
Assistance overview ... 16
First-aid kit (soft sided) ... 187
Safety vest ... 187
Warning lamp ... 187
Emergency braking
Electric parking brake ... 136
Manual parking brake ... 134
Emergency call system
Automatic emergency call ... 188
Information ... 187
Manual emergency call ... 188
Overview ... 187
Emergency engine start ... 199
Emergency operation mode
Starting the vehicle ... 104
Emergency Tensioning Devices
Activation ... 29
Engaging drive position (automatic transmission) ... 117
Engaging neutral (automatic transmission) ... 116
Engaging reverse gear ... 116
Engaging/disengaging LOW RANGE ... 119
Engine
Engine number ... 231
Jump-starting ... 190
Parking (start/stop button) ... 132
Problems ... 127
Starting (in emergency operation mode) ... 104
Starting (start/stop button) ... 104
Engine electronics (notes) ... 230
Engine number ... 231
Engine oil ... 176
Additive ... 237
Checking the oil level (on-board computer) ... 176
Checking the oil level with a dipstick ... 175
Filling capacity ... 238
Topping up ... 176
Engine output
Notes on changes ... 23
ENR (electronic level control) ... 121
Function ... 121
Lowering the vehicle ... 123
Manually inflating air bellows ... 124
Problems ... 125
Raising the vehicle ... 123
Environmental protection
Notes ... 18
ESC (Electronic Stability Control)
see ESP® (Electronic Stability Program)
ESP®
Crosswind Assist ... 138
Trailer stabilization ... 139
ESP® (Electronic Stability Program) ... 138
Activating/deactivating ... 138
Function/notes ... 138
Exhaust emission monitoring ... 107
Exterior lighting
Care ... 183
Exterior lighting
see Lights

F

Fatigue detection
see ATTENTION ASSIST
First-aid kit (soft sided) 187
Flat tire 188
Changing a wheel 221
Notes 188
Floor covering
Installing/removing (starter battery) 192
Floor mat 78
Foreign trip
Instructions 107
symmetrical low beam 79
Free software 27
Frequencies
Mobile phone 230
Two-way radio 230
Front airbag (driver, front passenger) .. 32
Front door
Opening (from inside) 44
Unlocking (from inside) 44
Front seats
8-way adjustment options 62
Adjusting (electrically) 62
Adjusting (manually) 59, 61
Memory function 62
Turning 65
With Seat Comfort Package 61
Without Seat Comfort Package 59
Fuel 234
Additives 234
Diesel 234
Draining the filter 180
E10 234
Flexible fuel vehicles 234
Fuel reserve 236
Gasoline 234
Low outside temperatures 234
Problems 127
Quality (diesel) 234
Quality (gasoline) 234
Refueling 125
Sulfur content 234
Tank capacity 236
Fuel consumption (on-board computer) 162
Fuses 199, 200
Before replacing 199
Fuse box in the front-passenger footwell 200
Fuse box in the seat base of the driver's seat 199
Notes 199

G

Gasoline 234
General operating permit number (EU) 231
Genuine parts 18
Glasses compartment 74
Gross axle weight rating 231
Gross mass 231

H

Handbrake (electrical)
see Electric parking brake
Handbrake (manual)
see Manual parking brake
Handling control system
see ESP® (Electronic Stability Program)
Hazard warning lights 80
Switching on/off 80
Hazardous substances
Information 21
Head restraint
Adjusting mechanically 70
Headliner (care) 185
Heating system (control panel) 93
High beam 80
Activating/deactivating 80
Adaptive Highbeam Assist 81
Changing bulbs 84
High-beam flasher 80
Hill start assist 145
HOLD function 145
Hot-water auxiliary heater 100
Function 100
Problems 101
switching on/off with the button 100
Switching on/off with the on-board computer 101
Hydroplaning 109

I

Identification plate
Engine 231

Refrigerant 241
Vehicle 231

Ignition key
see Key

Immobilizer 55

Implied warranty (vehicle) 24

Indicator 80
Activating/deactivating 80
Changing bulbs (front) 84
Changing bulbs (rear) (Cargo Van and Passenger Van) 86
Changing bulbs (rear) (chassis) 87

Inside rearview mirror display
Functions 145

Installations 19

Instrument Display
Function/notes 158
Overview 7, 158
Setting the lighting 161

Instrument Display
see Warning/indicator lamp

Instrument lighting 161

Intelligent light system
Adaptive Highbeam Assist 81
Cornering light 80

Interior lamps (rear compartment) (replacing the light bulbs) 88

Interior lighting
Cargo compartment 83
Rear compartment 83
Setting 81

Interior motion sensor
Function 57
Switching on/off 57

Interior roof carrier system 170

J

Jack 220
Hydraulic 201
Removing the hydraulic jack from the stowage compartment 201
Storage location of hydraulic jack 201

Jump-start connection 190

Jump-starting
see Jump-start connection

K

Key 41
Battery 42
Electrical consumption 42
Functions 41
Key ring attachment 42
Mechanical key 42
Overview 41
Problem 43
Radio connection 41
Unlocking setting 42

L

Labeling (tires)
see Tire labeling

Lane detection (automatic)
see Active Lane Keeping Assist

Lane Keeping Assist 149
Function 149
System limitations 149
Trailer operation 149

Lane Keeping Assist
see Active Lane Keeping Assist
see Lane Keeping Assist

LATCH-type (ISOFIX) child seat securing system
Installing 36
Notes 36

Level control
see ENR (electronic level control)

License plate lamp (changing bulbs) 86

Light switch (overview) 79

Lighting
see Lights

Lights 79
Adaptive Highbeam Assist 81
Automatic driving lights 79
Combination switch 80
Cornering light 80
Driving abroad (symmetrical low beam) 79
Hazard warning lamps 80
High beam 80
High-beam flasher 80
Indicator 80
Light switch 79
Low beam 79
Parking light 79
Rear fog light 79
Responsibility with lighting systems 79
Setting the instrument lighting 161

Limiting speed 107

Load
Determining the maximum 211

Sample calculation 212

Load distribution 167

Load index (tire) 215

Load securing
Cargo tie-down point 168
Installing and removing tie-down eyes 169
Notes 167

Load-bearing capacity (tire) 215

Loading
Definitions 216

Loading guidelines 72, 166

Loading information table 210

Low beam
Activating/deactivating 79
Changing bulbs 84
Setting for abroad (symmetrical) 79

LOW range 119

Lubricant additives
see Additive

Lumbar support (4-way) 64

M

M+S tires 203

Maintenance
Vehicle 21

Maintenance
see ASSYST PLUS

Malfunction
Restraint system 28

Malfunction message
see Display message

Manual parking brake 133
Applying/releasing 133
Emergency braking 134
Folding up/down 133

Manually inflating air bellows (ENR) ... 124

Matte finish (cleaning instructions) ... 182

Maximum load
Determining 211
Sample calculation 212

Maximum tire load 214

Maximum tire pressure 215

Mechanical key
Locking door 45
Removing/inserting 42
Unlocking door 45

Memory function (seat) 64

Menu (on-board computer)
Assistance graphic 161
Overview 159
Service 161
Settings 163
Trip 162

Mercedes PRO
Information 164

Mercedes PRO connect
Accident management 165
Information 164
Making a call via the overhead control panel 164
Roadside Assistance call via the Roadside Assistance button 164
Transferred data 165

Mercedes-Benz emergency call system
Information on data processing 188

Message (multifunction display)
see Display message

Message memory 247

Mirrors
Adjusting the inside rearview mirror ... 91

Mirrors
see Outside mirrors

Mobile phone 230
Frequencies 230
Transmission output (maximum) 230
Wireless charging 78

Mobile phone
see Mobile phone

Model series 231

Mounting a load 72, 166

Multi Purpose Vehicle (MPV) 24

Multifunction display (on-board computer) 160

Multifunction steering wheel
Button overview 159

Multifunction steering wheel
see Steering wheel

N

Nozzles
see Air vents

O

Occupant safety
Pets in the vehicle 40
Occupant safety
see Airbag
see Restraint system
see Seat belt
Odometer
see Display total distance (trip menu)
Oil
see Engine oil
On-board computer 159
Adjusting the stationary heater/ventilation 101
Assistance graphic menu 161
Displaying the service due date 173
Menus overview 159
Multifunction display 160
Operating 159
Service menu 161
Settings menu 163
Trip menu 162
On-board diagnostics interface
see Diagnostics connection
On-board electronics
Engine electronics 230
Notes 230
Two-way radios 230
Open-source software 27
Opening and closing the lockable compartment above the windshield 73
Opening the cup holder in the rear passenger compartment 74
Opening/closing the hood 173
Operating fluids
Additives (fuel) 234
Brake fluid 239
Coolant (engine) 239
DEF 236
Engine oil 237
Fuel (diesel) 234
Fuel (gasoline) 234
Notes 233
Windshield washer fluid 240, 241
Operating Instructions (vehicle equipment) 20
Operating safety
Changes in the engine power output 23
Declaration of conformity (wireless vehicle components) 22
Information 21
Operating system
On-board computer 159
Outside mirrors 90
folding in/out 90
Setting 90
Setting options 14
Overhead control panel
Adjusting the interior lighting 81
Overview 10

P

Paint (cleaning instructions) 182
Paint code 231
Park position
Engaging 116
Engaging automatically 116
Parking brake (electrical)
see Electric parking brake
Parking brake (manual)
see Manual parking brake
Parking for an extended period 136
Parking light 79
Partition sliding door
From the cargo compartment 51
From the driver's compartment 51
Permissible gross mass 231
Permissible towing methods 195
Pets in the vehicle 40
Placing a load on the wheel arch 172
Plastic trim (care) 185
Power supply
Battery main switch 114
Switching on (start/stop button) 103
Power washer (care) 181
Power windows
see Side window

Q

QR code (rescue card) 24
Qualified specialist workshop 23

R

Rack systems (information) 169
Radar sensors 136

Radio connection
Key 41
Real wood (care) 185
Rear
Motion detector 83
Rear bench seat
see Seats
Rear Cross Traffic Alert 148
Rear fog light 79
Rear view camera
Care 183
Functions 145
With rear-view mirror display 146
Rear window wiper
Replacing 90
Switching on/off 89
Rear-compartment heating 96
Rear-end doors
Opening and closing (from inside) 51
Opening and closing (from outside) 50
Rear-view mirror display
Displaying/hiding 146
Reducing agent
see DEF
Refrigerant (air conditioning)
Notes 241
Refueling
Displaying the DEF fill level 128
Displaying the DEF range 128
Refueling the vehicle 125
Topping up DEF 129
Regeneration
Notes 114
Registration
Vehicle 23
Removing the vehicle tool kit 200
Replacing a wheel
Installing a new wheel 223
Replacing light bulbs
Indicators (rear) (Cargo Van and Passenger Van) 86
Reversing lights (Cargo Van and Passenger Van) 86
Reporting safety defects 24
Rescue card 24
Restraint system 28
Children, notes on safe transportation 34
Function in an accident 29
Functionality 28
Malfunction 28
Protection 28
Reduced protection 28
Self-test 28
Warning lamp 28
Restricting the shift range 117
Reversing light
Changing bulbs 87
Reversing lights
Replacing light bulbs (Cargo Van and Passenger Van) 86
Rims (care) 183
Roadside Assistance (breakdown) 21
Roll away protection
see HOLD function
Roof carrier (inside) 170
Roof rack 246
Roof rack (information) 169

S

Safety vest 187
Seat belt 30
Care 185
Protection 30
Seat belt warning
see Seat belts
Seat belts 32
Adjusting the height 31
Fastening 31
Reduced protection 30
Releasing 32
Warning lamp 32
Seat cover (care) 185
Seats 59, 66
4-way lumbar support 64
8-way adjustment options 62
Adjusting armrests 66
Adjusting the armrests (rear bench seat) 69
Adjusting the head restraints mechanically 70
correct driver's seat position 59
Folding the folding seat up/down 66
front (adjust electrically) 62
Front (adjusting manually, with Seat Comfort Package) 61
Front (adjusting mechanically, without Seat Comfort Package) 59

Front (adjusting mechanically) 61
Installing and removing rear bench seat 66
Memory function 62
Operating the memory function 64
Setting options 14
Turning (front seat) 65
With Seat Comfort Package 61
Without Seat Comfort Package 59

Securing luggage 72, 166

Selector lever
see DIRECT SELECT lever

Sensors (care) 183

Service
see ASSYST PLUS

Service (on-board computer) 161

Service center
see Qualified specialist workshop

Service interval display
see ASSYST PLUS

Service products
Refrigerant (air conditioning) 241

Setting the speed
see Cruise control

Settings (on-board computer) 163

Short-distance trips 107

Side airbag 32

Side window 53
Closing 53
Closing (all) 53
Closing using the key 54
Convenience closing 54
Convenience opening 54
Opening 53
Opening (all) 53
Opening with the key 54

Side windows
Problem 55
Resetting 55

Size designation (tire) 215

Sliding door
B-pillar door sill (button) 47
Center console (button) 47
Child safety lock 39
Closing (from inside) 46
Closing (from outside) 45
Opening (from inside) 46
Opening (from outside) 45

Snow chains 203

Socket (12 V) 75
Cargo compartment 76
Driver's seat 76
Front center console 75

Socket (115 V) 76
Lower control panel 76

Spare wheel
Installing/removing 226
Notes 225

Special seat belt retractor 35

Specialist workshop 23

Speed limitation, winter tires
Setting 142

Speed rating (tire) 215

Speedometer (digital) 162

Standby mode
Activating/deactivating 136

Start/stop button
Parking the vehicle 132
Starting the vehicle 104
Switching on the power supply or the ignition 103

Starting
see Vehicle

Starting-off aid
see Hill start assist

Stationary heating
Problems 101

Stationary heating/ventilation
Adjusting (on-board computer) 101

Stationary heating/ventilation
see Auxiliary heating
see Hot-water auxiliary heater

Steering wheel 159
Adjusting 71
Buttons 159

Stopping the alarm (ATA) 56

Stowage areas
see Stowage space

Stowage compartments
see Stowage space

Stowage space 73
Armrest 73
Center console 73
Cockpit 73
Door 73
Glasses compartment 74
Glove box 73

Sulfur content 234

Summer tires 202
Switching air-recirculation mode on/off 98
Switching on ignition (start/stop button) 103
Switching seat heating on/off 70
Switching synchronization function on/off (control panel) 97
Switching the A/C function on/off 96
Switching the rear window defroster on/off 98
Switching the windshield heater on/off 98

T

Tailpipes (care) 183
Tank capacity
Fuel 236
Reserve (fuel) 236
Tank content
DEF 237
Technical data
Information 230
Notes (trailer hitch) 241
Tire pressure monitor 210
Vehicle identification plate 231
Telephone
Wireless charging (mobile phone) 78
Temperature grade 213
Tie-down eyes 169
Tire and Loading Information placard 210
Tire Identification Number (TIN) 214
Tire information table 210
Tire labeling 213
Characteristics 215
DOT, Tire Identification Number (TIN) 214
Load index 215
Load-bearing capacity 215
Maximum tire load 214
Maximum tire pressure 215
Overview 213
Size designation 215
Speed rating 215
Temperature grade 213
Tire quality grades 213
Traction grade 213
Tread wear grade 213
Tire load (maximum) 214
Tire pressure
Checking (tire pressure monitoring system) 209
Maximum 215
Notes 204
Restarting the tire pressure monitor 210
Tire pressure monitoring system (function) 208
Tire pressure table 205
Tire pressure monitor
Checking the tire pressure 209
Checking the tire temperature 209
Function 208
Restarting 210
Technical data 210
Tire pressure table 205
Tire quality grades 213
Tire temperature
Checking (tire pressure monitoring system) 209
Tire pressure monitoring system (function) 208
Tire tread 202
Tire-change tool kit 220
Tires
Characteristics 215
Checking 202
Checking the tire pressure (tire pressure monitoring system) 209
Definitions 216
Direction of rotation 220
DOT, Tire Identification Number (TIN) 214
Flat tire 188
Installing 223
Load index 215
Load-bearing capacity 215
M+S tires 203
Maximum tire load 214
Maximum tire pressure 215
Noise 202
Notes on installing 218
Overview of tire labeling 213
Removing 223
Replacing 218, 221
Restarting the tire pressure monitor 210
Selecting 218
Size designation 215
Snow chains 203

Speed rating 215
Storing 220
Summer tires 202
Temperature grade 213
Tire and Loading Information placard 210
Tire pressure (notes) 204
Tire pressure monitoring system (function) 208
Tire pressure table 205
Tire quality grades 213
Traction grade 213
Tread wear grade 213
Unusual driving characteristics 202
Wheel size categories 220

Tool
see Removing the vehicle tool kit
see Vehicle tool kit
see Vehicle tool kit stowage compartment

Top Tether 37

Topping up the windshield washer system 179

Touch Control
On-board computer 159

Tow starting 199

Tow-away alarm
Function 56
Switching on/off 57

Towing away 196
Raised front or rear axle 197

Towing eye
Installing/removing 198
Storage location 198

Towing eye (storage location)
see Vehicle tool kit

Towing methods 195

Traction grade 213

Trailer hitch
Care 183
General notes 241
Information 155
Information about trailer operation ... 151
Permissible trailer loads and trailer drawbar noseweights 155
Power supply 156
Socket 154

Trailer loads 242

Trailer operation
Active Lane Keeping Assist 150
Coupling/Decoupling the trailer 154
Gross axle weight rating 231
Information 155
Lane Keeping Assist 149
Notes 151
Permissible trailer loads and trailer drawbar noseweights 155
Power supply 156
Socket 154
Trailer loads 242

Trailer stabilization 139

Transmission position display 115

Transmission ratio
LOW range 119

Transmission ratio
see Engaging/disengaging LOW RANGE

Transport by rail 108

Transporting (vehicle breakdown) 197

Tread wear grade 213

Trim element (care) 185

Trip
Display total distance 162
Menu (on-board computer) 162

Trip computer
Resetting 163
Showing 162

Trip distance 162
Showing 162

Trip odometer
Resetting 163

Trip odometer
see Trip distance

Turn signal light
Additional turn signal light (all-wheel drive vehicles) 85

Two-way radio telephone
see Mobile phone

Two-way radios
Frequencies 230
Installation notes 230
Transmission output (maximum) 230

U

Unlocking setting 42

Unlocking/locking
Switching automatic locking feature on/off 45
Unlocking and opening front doors from inside 44

USB socket in the rear passenger compartment 77

Using a sun visor 92
Using kickdown 118

V

Vehicle 104
Correct use 23
Data recording 25
Diagnostics connection 22
Equipment 20
Implied warranty 24
Locking (automatic) 45
Locking/unlocking (emergency key) .. 45
Lowering 224
Maintenance 21
Notifying problems 24
Parking (start/stop button) 132
Parking for an extended period 136
QR code rescue card 24
Qualified specialist workshop 23
Raising 221
Registration 23
Starting (in emergency operation mode) 104
Starting (start/stop button) 104
Switching on power supply (start/stop button) 103
Unlocking (from inside) 44
Ventilating (convenience opening) 54

Vehicle components which receive and/or transmit radio waves
Declaration of conformity 22

Vehicle data
Vehicle height 241
Vehicle length 241
Vehicle width 241
Wheelbase 241

Vehicle data memory
Electronic control units 25
Service providers 26

Vehicle data storage
Event data recorders 26

Vehicle dimensions 241

Vehicle identification number
see VIN

Vehicle identification plate
EU general operating permit number 231
Gross axle weight rating 231
Paint code 231
Permissible gross mass 231
VIN 231

Vehicle identification plate
see Model series

Vehicle key
see Key

Vehicle level
Lowering 123
Raising 123

Vehicle maintenance
see ASSYST PLUS

Vehicle operation
Outside the USA or Canada 20

Vehicle tool kit 198, 200

Vehicle tool kit stowage compartment 200

VIN 231
Identification plate 231
Reading out 231
Seat 231
Windshield 231

W

Warning and indicator lamps
Overview 266

Warning lamp 187

Warning system
see ATA (Anti-Theft Alarm system)

Warning/indicator lamp 7
ABS warning lamp 272
and 267, 268, 269, 270
Brake system warning lamp (yellow) 269
Brake warning lamp (red) (Canada) 270
BRAKE Brake warning lamp (red) (USA) 270
Coolant warning lamp 273
Distance warning lamp 273
Electric parking brake applied red indicator lamp (Canada) does not light up 267
PARK Electric parking brake applied red indicator lamp (USA) does not light up 267
Electric parking brake malfunctioning yellow indicator lamp lights up 267, 268

Electrical malfunction warning lamp 274
Engine diagnosis warning lamp 274
ESP® OFF warning lamp 271
ESP® warning lamp flashes 271
ESP® warning lamp lights up 271
Fuel reserve warning lamp 274
Power steering system warning lamp 273
Red electric parking brake applied indicator lamp (Canada) flashes 268
Red electric parking brake applied indicator lamp (Canada) lights up 267, 268
PARK Red electric parking brake applied indicator lamp (USA) flashes 268
PARK Red electric parking brake applied indicator lamp (USA) lights up 267, 268
Red parking brake applied indicator lamp (Canada) lights up 269
PARK Red parking brake applied indicator lamp (USA) lights up 269
Restraint system warning lamp 270
Seat belt warning lamp flashes 272
Seat belt warning lamp lights up 272
The electric parking brake malfunctioning yellow indicator lamp does not light up 268
Tire pressure monitoring system warning lamp flashes 274
Tire pressure monitoring system warning lamp lights up 275

Warranty 24
Warranty terms and conditions 20
Washer fluid
see Windshield washer fluid (notes)
Washing by hand (care) 182
Wheel rotation 219
Wheel size categories 220
Wheel wrench 220
Wheels
Care 183
Characteristics of the tire 215
Checking 202
Checking the tire pressure (tire pressure monitoring system) 209
Definitions 216
DOT, Tire Identification Number (TIN) 214
Flat tire 188
Installing 223
Load index 215
Load-bearing capacity 215
Maximum tire load 214
Maximum tire pressure 215
Noise 202
Notes on installing 218
Overview of tire labeling 213
Removing 223
Replacing 218, 221
Restarting the tire pressure monitor 210
Rotating 219
Selecting 218
Size designation 215
Snow chains 203
Speed rating 215
Storing 220
Temperature grade 213
Tire and Loading Information placard 210
Tire pressure (notes) 204
Tire pressure monitoring system (function) 208
Tire pressure table 205
Tire quality grades 213
Traction grade 213
Tread wear grade 213
Unusual driving characteristics 202
Window curtain airbag 32
Windows
see Side window
Windows (care) 183
Windshield 89
Replacing the wiper blades 89
Replacing the wiper blades (WET WIPER SYSTEM) 89

Windshield
see Windshield
Windshield washer fluid
Information 241
Windshield washer fluid (notes) 240
Windshield wipers
Replacing the wiper blades 89
Replacing the wiper blades (WET WIPER SYSTEM) 89
Switching on/off 88
Winter driving (snow chains) 203
Winter tires 203
Setting a permanent speed limitation 142
Wiper blades
Care 183
Replacing (rear window) 90
Replacing (WET WIPER SYSTEM) 89
Replacing (windshield) 89
Wireless charging
Function/notes 77
Mobile phone 78
Workshop
see Qualified specialist workshop

Publication details

Internet
Further information about Mercedes-Benz vehicles and about Daimler AG can be found on the following websites:

http://www.mercedes-benz.com

http://www.mbusa.com (USA only)

http://www.mercedes-benz.ca (Canada only)

Documentation team
Should you have any questions or suggestions regarding these Operating Instructions, you can reach the technical documentation team at the address listed on the inside cover page.

©Daimler VANS USA, LLC

Daimler VANS USA, LLC and Mercedes-Benz Canada, Inc. are Daimler enterprises.

©Daimler AG: not to be reprinted, translated or otherwise reproduced, in whole or in part, without written permission from Daimler AG.

Vehicle manufacturer
Daimler AG

Mercedesstraße 137

70327 Stuttgart

Germany

Vehicle dealer
Daimler VANS USA, LLC

One Mercedes-Benz Drive

Sandy Springs, GA 30328

http://www.mbusa.com (USA only)

www.mbsprinterusa.com

Customer Assistance Center:

1-877-762-8267

Mercedes-Benz Canada, Inc.

98 Vanderhoof Avenue

Toronto, ON M4G 4C9

http://www.mercedes-benz.ca (Canada only)

Customer Relations Department:

1-800-387-0100

Mercedes-Benz USA, LLC and Mercedes-Benz Canada, Inc. are Daimler enterprises.

Canada only: "Authorized Sprinter Dealer" is defined as an authorized Mercedes-Benz Sprinter Dealer.

As at 25.06.2018

YOUR OPERATING INSTRUCTIONS

Vehicle document wallet in the vehicle
Here you can find information on operation, service work and the guarantee for your vehicle in printed form.

Digital on the Internet
You can access the Operating Instructions on the Mercedes-Benz homepage.

Digital as an app
The Mercedes-Benz Guides app is available free of charge in common app stores.

Apple® iOS

Android™

9075844103

Order no. T907 0128 13 Part no. 907 584 41 03 Edition C-2019